Journal of Embedded Systems, 2014, Vol. 2, No. 1, 15-17
Available online at http://pubs.sciepub.com/jes/2/1/3
© Science and Education Publishing
DOI:10.12691/jes-2-1-3

Design of Embedded Sing-around System for Ultrasonic Velocity Measurements in Liquids

S. J. Sharma[1,*], A. C. Balharpure[1], A. S. Pande[1], S. U. Dubey[1], G. K. Singh[2], V. M. Ghodki[3], S. Rajagopalan[1]

[1]Department of Electronics, RTM Nagpur University, Nagpur, India
[2]Department of Electronics, Anand Niketan College, Warora, India
[3]Department of Electronics, J. B. Science College, Wardha, India
*Corresponding author: sharmasat@gmail.com

Received August 29, 2013; Revised September 29, 2013; Accepted February 08, 2014

Abstract Among the pulse techniques in ultrasonics, sing around technique is widely used for measurements of ultrasonic velocity in liquids and solids. It is simple, versatile and highly accurate for absolute and relative ultrasonic velocity measurements. In the present work, an embedded sing around system, at operating frequency of 2 MHz, is designed around PIC 18F4550 microcontroller. Pulser and receiver circuits have been designed using locally available electronic components. Necessary controls have been dumped or embedded as software in the microcontroller to add intelligence to the sing around system. The designed system is compact, stand-alone, reliable, accurate and portable with onboard display of the ultrasonic velocity of propagation in the sample under study. Ultrasonic velocity measurements have been carried out in standard liquids and found to be in well agreement with the values reported in the literature.

Keywords: *pulse method, sing around technique, embedded system, PIC 18F4550, time of flight measurement, ultrasonic velocity, intelligent system*

Cite This Article: S. J. Sharma, A. C. Balharpure, A. S. Pande, S. U. Dubey, G. K. Singh, V. M. Ghodki, and S. Rajagopalan, "Design of Embedded Sing-around System for Ultrasonic Velocity Measurements in Liquids." *Journal of Embedded Systems*, vol. 2, no. 1 (2014): 15-17. doi: 10.12691/jes-2-1-3.

1. Introduction

Low amplitude ultrasonic propagation in a medium is characterized by the changes in velocity of propagation (how fast it travels) and attenuation (how fast it decays). In this case, the medium retains its intrinsic state and the wave gets modified, hence, it is a non-destructive technique. Most of the instrumentation design is focused around the measurements of these two parameters. There are several methods for the measurement of ultrasonic velocity of propagation such as: continuous wave, standing wave (resonance method), optical, reverberation, impedance, pulse etc. Amongst these methods, the pulse method is the most popular due to its high accuracy, reproducibility of results and simplicity of operation. The pulse method includes pulse echo overlap, pulse superposition, sing around and pulse echo techniques.

Among the pulse techniques, sing-around technique is widely used in the measurement of ultrasonic velocity with better accuracy in relative measurements. The principle of this technique was first proposed by Cedrone and Curran [1]; while its high accuracy was first attempted by Forgacs [2]. The technique was patented by H. Asada [3]. Since then, several workers [4-26] have improved this technique in terms of its performance, accuracy and stability. Length of the optical fiber cable has been determined by Nakamura *et al* [22], using this technique. Ghodki *et al* [23,27,28,29] have designed virtual sing around technique with improved accuracy and Singh *et al* [30,31,32,33] have controlled a virtual sing around technique wirelessly using e-mail and mobile phone and over internet to be operated remotely.

An electrical pulse is sent to the transmitting transducer by a triggered pulse generator. The pulse after passing through the specimen is received by the receiving transducer, amplified and used to generate a trigger signal that initiates a new pulse for the transmitter. This loop runs continuously and a counter measures the frequency of occurrence of triggered signals. The conventional sing-around technique is shown in Figure 1.

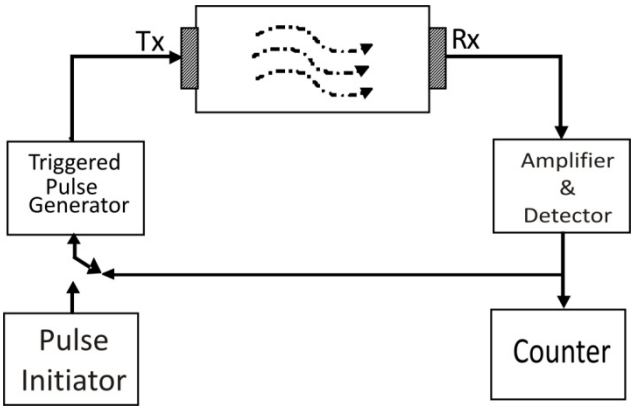

Figure 1. Block diagram of Sing-around Technique

2. Experimental

In present work, an embedded sing-around technique is implemented using a matched pair of 2 MHz piezoelectric transducers. These transducers are mounted to the two end of the sample holder, designed in our laboratory. An 8-bit microcontroller PIC 18F4550 is used to provide intelligence to the sing-around system. The entire system is designed in such a manner that number of electronic components used in the design of pulse generator, amplifier and the detector circuits, drastically gets reduced. In a conventional and PC based instrumentation designs, a rf burst is generated using electronic components, which consumes more power. Moreover, the system is not portable. In such a system, GUI control panel is designed in VB or Lab VIEW to control the operations. These problems are overcome in the present embedded sing-around system. The system becomes simple in design, compact, reliable, precise and portable. There is no need to have the control panel as the system is stand-alone. The required parameters can be displayed as a rolling display and the use of PC can be discarded, once the micro-controller is programmed.

Figure 2 shows the block diagram of the embedded sing around system, designed in the present work, using PIC micro-controller 18F4550. An rf burst of 2 MHz is generated by the microcontroller itself, which is amplified using buffer 7407 and pull-up resistor and fed to the transmitting transducer, Tx. The received signal, after receiving transducer, Rx, is amplified by an operational amplifier, LM 7171. This signal is detected and fed to the µC 18F4550. The program to generate the necessary control signals for the start/stop of the counter, trigger pulse and synchronization of data acquisition, analysis and display, is embedded into the micro-controller, via USB port of the PC. The time of flight is measured using the internal timer of the micro-controller having frequency of 12 MHz.

The sample under investigation is placed in the liquid cell and Julabo ME-32 circulating thermostat maintains the constant temperature to ± 0.1°C. The system is programmed to measure the time of flight for 1000 readings and displays the average time of flight on the LCD display. The system is calibrated as per the procedure mentioned in the earlier work carried out in our laboratory [23]. This stand-alone embedded system, designed, adds an intelligence [33,34] to the present sing-around system.

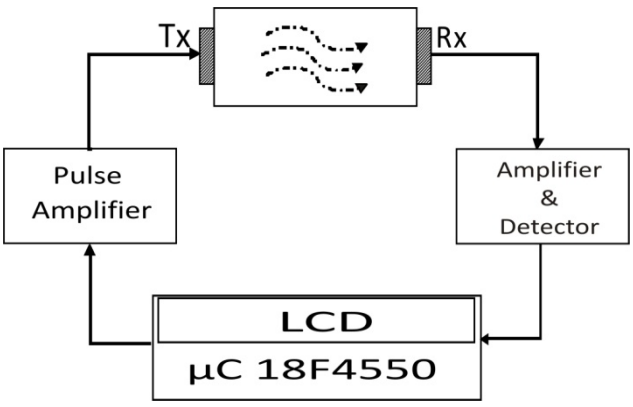

Figure 2. Block diagram of Embedded Sing-around System

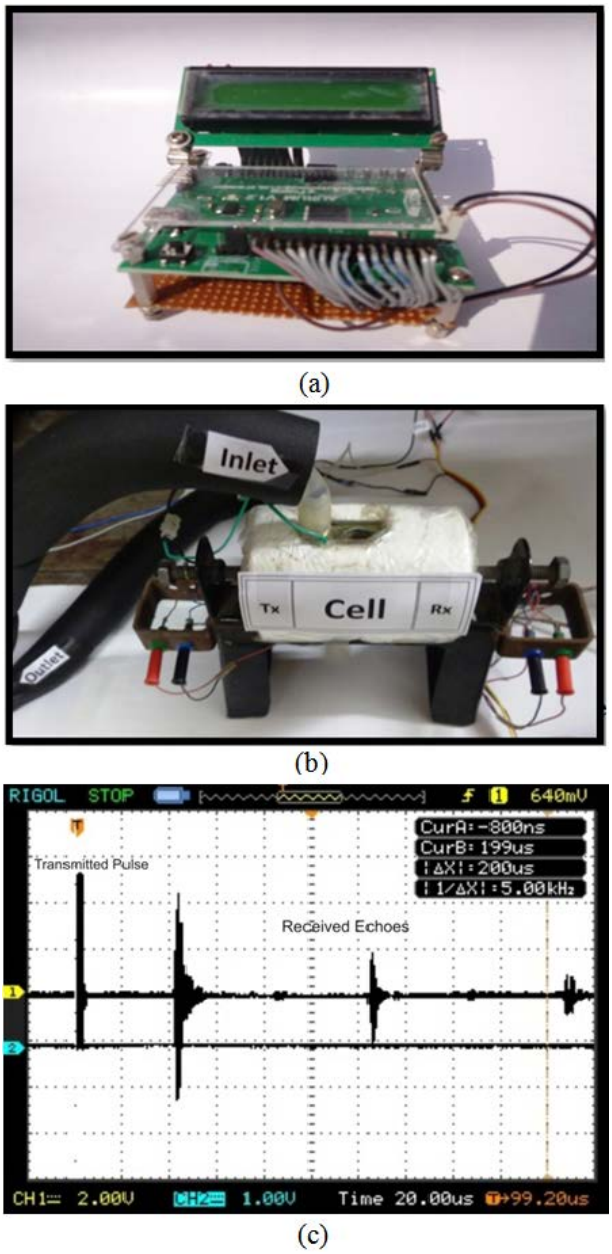

Figure 3. (a) Photograph of the embedded sing-around system (b) Liquid cell used in the system and (c) Transmitted pulse and received echoes

Table 1.

Sample	Temperature (°C)	Literature Value u (m/s)	Experimental Value u (m/s)
Distilled Water	8.0	1439.132	1436.882
	10.0	1447.270	1445.771
	20.0	1482.343	1482.457
	22.3	1491.921	1489.188
	24.0	1493.976	1491.921
	25.3	1497.486	1495.708
	26.0	1499.323	1501.506
	30.0	1509.127	1511.216
	36.0	1521.745	1521.052
	42.0	1532.056	1531.017
	48.0	1540.256	1541.114
	54.0	1546.517	1545.735
	60.0	1550.986	1551.344
Methanol	20.0	1120.00	1125.478
	30.0	1089.360	1083.724
	40.0	1055.780	1054.386
Ethanol	20.0	1160.300	1194.510
	30.0	1126.200	1164.740
	40.0	1092.700	1125.480

3. Results and Discussion

The system developed in the laboratory has been tested for the ultrasonic velocity measurements in different standard liquids. It is observed that the experimentally measured values match those reported in the literature [35]. Ultrasonic velocity measurements in ethanol show large deviation from the literature values, due to the grades of the chemicals used. Table 1 shows the results of our measurements carried out in standard liquids at different temperatures.

Acknowledgement

The Authors are thankful to VI Labs, Department of Electrical and Electronics Engineering, Indian Institute of Technology, Bombay, India, for providing PIC µC 18F4550 boards (AURUM v1.2) for the experimental work. One of the authors (SJS) would like to acknowledge UGC, New Delhi for the financial support to carry out the present research work.

References

[1] Cedrone N. P, and Curran D. R., "Electronic Pulse Method for Measuring the Velocity of Sound in Liquids and Solids", *J. Acoust. Soc. Am. 26(6), 963-967 (1954).*

[2] Forgacs R. L., "Improvements in the Sing-Around Technique for Ultrasonic Velocity Measurements", *J. Acoust. Soc. Am. 32(12), 1697 (1960).*

[3] H. Asada., "Sing-around Type Ultrasonic Measurement Instrument", *United States Patent 3,710,621 (Jan. 16, 1973).*

[4] Herzfeld K. F., "Fifty Years of Physical Ultrasonics", *J. Acoust. Soc. Am., 39(5.1), 813-825 (1966).*

[5] Khimunin A. S., "Circuit Errors in Measurement of the Velocity of Sound in Liquids by means of a Sing-around Velocimeter", *Sov. Phy. Acoust., 14(1), 75-78 (1968).*

[6] Kononenko V. S. and Yakovlev V. F., "Precision method for measuring the velocity of ultrasound in liquid at 0.7 - 30 MHz", *Sov. Phys. Acoust, 15(1), 65-68 (1969).*

[7] D'Arrigo G., Marietti P., and Taraglia P., "A new form of the Sing-Around Technique for Ultra-Sonic Velocity Measurements", *Letts. al Nuovo Cimento, 1(4), 105-114 (1970).*

[8] Lacy L. L. and Daniel A. C., "Measurements of Ultrasonic Velocities using a Digital Averaging Technique", *J. Acoust. Soc. Am.,52(1.2), 189-195 (1972).*

[9] Srinivasan K. R., Krishnan S., Shivaraman A., Nagarajan N., Ramakrishnan J. and Gopal E. S. R., "A Versatile Ultrasonic Pulse Echo Interferometer for Precise Velocity Measurement in Solids", *Symposium on Transducer Technology, Cochin (India), 283-288 (1975).*

[10] North M. A., Pethrick R. A. and Phillips W. D., "Ultrasonic studies of solid poly(alkyl methacrylates)", *Polym., 18, 324-326 (1977).*

[11] Sunnapwar K. P., Soitkar V. S., Dutt R. S. and Navaneeth G. N., "Automated Pulse Repetition Time Measurements in a Sing-around system in Ultrasonics", *Acoust. Letts, 4(6), 104-109 (1980).*

[12] Yogurtcu Y. K., Lambson E. F., Miller A. J. and Saunders G.A., "An Apparatus for High Precision Measurements of Ultrasonic Wave Velocity", *Ultrason., 155-159 (1981).*

[13] Soitkar V. S., Sunnapwar K. P. and Navaneeth G. N., "A Solid State Pulsed Sing-Around System for Ultrasonic Velocity Measurements", *J. of Pure & Appl. Phys., 19, 555-559 (1981).*

[14] Adachi K., Harrison G., Lamb J., North M. A., Pethrick A. R., "High Frequency Ultrasonic Studies of Polyethylene", *Polym., 22, 1032-1039 (1981).*

[15] Rajagopalan S., "Ultrasonic Velocity Measurement for High Accuracy", *CSIO Communication, 9(4), 131-136 (1982).*

[16] Woodward B. and Salman N. A., "A Programmable Ultrasonic Velocimeter", *Acoust. Letts, 6(8), 110-114 (1983).*

[17] Agnihotri P. K., Adgaonkar C. S. and Bedare C. Y., "A Low Cost Solid Pulsed System for Ultrasonic Velocity and Absorption Measurement", *Arch. of Acoust., 12(3-4), 301-310 (1987).*

[18] Adgaonkar C. S. and Agnihotri P. K., "A Low Cost Solid State Sender-receiver System for Ultrasonic Velocity Measurement", *Res. & Ind. 33, 139-143 (1988).*

[19] Tiwari S. A., Rajagopalan S. and Amirtha V., "A Frequency Selectable Sing-around System for Measurement of Ultrasonic Velocity", *Acoust. Letts, 14(7), 135-140 (1991).*

[20] Ernst S., Marczak W., Manikowski R., Zorebski E. and Zorebski M., "A Sing-around Apparatus for Group Velocity Measurement in Liquids. Testing by Standard Liquids and Discussion of the Errors", *Acoust. Letts, 15(7), 123-130 (1992).*

[21] Yawale S. P. and Pakade S. V., "Solid State Variable Frequency Pulser-receiver System for Ultrasonic Measurements", *J. of Pure & Appl. Phy., 33, 638-642 (1995).*

[22] Nakmura K., Okado T. and Ueha S.. "Measuring the Optical Length of a Plastic Optical Fibre using the Sing-around Method and its Sensor Applications", *J. Opt. A.: Pure & Appl. Opt. 3(5), L17-L19 (2001).*

[23] Ghodki V. M., "Development of PC based Technique for Acoustic Measurements", *Ph. D. Thesis, RTM Nagpur University, March 2005.*

[24] Dubey P. K., "Design and Study of Instrumentation for Ultrasonic Characterisation of Polymers", *Ph. D. Thesis, RTM Nagpur University, October 2006.*

[25] Pendsey V. M., "Development of PC based Pulse Technique for Ultrasonic Measurements", *Ph. D. Thesis, RTM Nagpur University, October 2011.*

[26] Kalyana Raman S. B., Arjav and Jayakumari T., "PC based Ultrasonic Instrumentation for Liquids", *J. Instrum. Soc. Ind. 37(2), 150-156 (2007).*

[27] Rajagopalan S., Sharma S. J. and Ghodki V. M., "PC based Design of Single Pulse Sender/receiver Technique for Ultrasonic Velocity Measurements", *J. Pure & Appl. Ultason. 29, 143-145 (2007).*

[28] Rajagopalan S., Sharma S. J. and Ghodki V. M., "Design of PC based Sing-around System", *J. Instrum. Soc. Ind. 37(4), 206-211 (2007).*

[29] Rajagopalan S., Sharma S. J. and Ghodki V. M., "Design of Virtual Sing-around System for Precise Ultrasonic Velocity Measurements", *Elect. J. Tech. Acoust. 5, (2010).*

[30] Singh G. K., Pendsey V. M., Sharma S. J. and Rajagopalan S., "Ultrasonic Velocity Measurements using GSM Network", *J. Instrum. Soc. Ind. 39(4), 258-259 (2009).*

[31] Singh G. K., Pendsey V. M., Sharma S. J. and Rajagopalan S., "Measurement of Ultrasonic Velocity in Liquids Using Wireless Technology: SMS", *ISOR J. Appl. Phys. 1(3), 20-22 (2012).*

[32] Singh G. K., Pendsey V. M., Sharma S. J. and Rajagopalan S., "Remote Monitoring of Pulser-receiver Setup for Ultrasonic Velocity Measurements using Email", *J. Instrum. Soc. Ind. 42(3), 172-174 (2012).*

[33] Singh G. K., "Control of Virtual Instrument using Wireless Technology", *Ph.D. Thesis, RTM Nagpur University, September 2012.*

[34] Gupta S. and John J., "Virtual Instrumentation Using Lab VIEW", *Tata McGraw-Hill Publishing Ltd, New Delhi (2005).*

[35] Grosso D. A. V. and Mader W. C., "Speed of Sound in Pure Water", *J. Acoust. Soc. Am. 52(5.2), 1942-1946 (1972).*