Applied Mathematics and Physics, 2013, Vol. 1, No. 4, 103-119
Available online at http://pubs.sciepub.com/amp/1/4/3
© Science and Education Publishing
DOI:10.12691/amp-1-4-3

Introduction of Derivatives and Integrals of Fractional Order and Its Applications

Mehdi Delkhosh*

Islamic Azad University, Bardaskan Branch, Department of Mathematics, Bardaskan, Iran
*Corresponding author: mehdidelkhosh@yahoo.com

Received August 21, 2013; Revised October 24, 2013; Accepted October 27, 2013

Abstract Fractional calculus is a branch of classical mathematics, which deals with the generalization of operations of differentiation and integration to fractional order. Such a generalization is not merely a mathematical curiosity but has found applications in various fields of physical sciences. In this paper, we review the definitions and properties of fractional derivatives and integrals, and we express the prove some of them.

Keywords: *fractional calculus, fractional derivatives, fractional integrals, derivative of fractional order, integral of fractional order*

Cite This Article: Mehdi Delkhosh, "Introduction of Derivatives and Integrals of Fractional Order and Its Applications." *Applied Mathematics and Physics* 1, no. 4 (2013): 103-119. doi: 10.12691/amp-1-4-3.

1. Introduction

1.1. History of Creation

In 1695, Hopital wrote a letter to Leibniz, to this content which, how can you justify $\frac{d^n y}{d^n x}$ when $n=\frac{1}{2}$? Leibniz wrote in answer, and suggested a close relationship between derivatives and infinite series (divergent), and he continues: "$d^{\frac{1}{2}}x$ is equal to $x\sqrt{\frac{dx}{x}}$.", And stated: "This is an obvious paradox that someday something good will result." [21].

In 1819, Lacroix devoted two pages to the discussion of the derivative of arbitrary order, in his book with seven hundred pages. He showed that if $y=x^a$ then $\frac{d^{\frac{1}{2}}y}{dx^{\frac{1}{2}}}=\frac{\Gamma(a+1)}{\Gamma(a+\frac{1}{2})}x^{a-\frac{1}{2}}$. In particular, this result obtained that $\frac{d^{\frac{1}{2}}}{dx^{\frac{1}{2}}}x=2\sqrt{\frac{x}{\pi}}$ [18].

In 1823, Abel provided the first application of the fractional calculus in physical problems, and of course he did not solve this problem. (Tautochrone: It is to determine a curve so that an object under the effect of gravity on it tumbles without friction, the time motion is independent of the starting point) [2].

In 1884, Laurent presented a theory of generalized operators D^v with v where is real, and he was confronted with the differentiation and integration of the arbitrary order [19].

In 1892, Heaviside applies derivatives of fractional order in the theory of transmission lines [12].

In 1936, Gemant continued theory of transmission lines of Heaviside and he used the fractional derivatives in elasticity [11].

In 1974, Ross held the "Proceeding of the International Conference on Fractional Calculus and Its Applications ", and report it published in a book [31].

In 1993, Kenneth Miller and Ross published the book: "an Introduction to the Fractional Calculus and Fractional Differential Equations". This book provides good methods [25].

In 1997, Kolwankar, in his doctoral thesis, paid to studies of fractal structures and processes using methods of fractional calculus [15].

In 2000, Hilfer published a book in 9 chapters: "Applications of Fractional calculus in Physics " [13].

In 2003, Falconer published a book in 18 chapters: "Fractal Geometry - Mathematical Foundations and Applications " [10].

Given clarify the importance and numerous applications of fractional derivatives and integrals, in recent years many articles and books on this subject have been published [3,4].

1.2. Gamma Function

Let $F(n)$ be factorial function. In this case, for any positive integer n, we have:

$$F(0)=1\,,\ F(n)=nF(n-1) \qquad n=1,2,3,... \qquad (1\text{-}1)$$

Gamma function for any positive x is defined as follows:

$$\Gamma(x)=\int_0^\infty t^{x-1}e^{-t}dt\,.$$

For the Gamma function can be demonstrated that:

$$\Gamma(1)=1$$
$$\Gamma(x+1)=x\Gamma(x) \qquad x>0 \tag{1-2}$$

Now, according to equations (1-1) and (1-2) we have:

$$x!=\Gamma(x+1).$$

For example,

$$\left(\frac{7}{2}\right)!=\Gamma(\frac{7}{2}+1)=\frac{7}{2}\Gamma(\frac{7}{2})=\frac{7}{2}\Gamma(\frac{5}{2}+1)=\ldots=\frac{105}{16}\Gamma(\frac{1}{2})$$

With the change of variable $t=u^2$:

$$\Gamma(\frac{1}{2})=\int_0^\infty t^{-\frac{1}{2}}e^{-t}dt=2\int_0^\infty e^{-u^2}du=2\frac{\sqrt{\pi}}{2}=\sqrt{\pi}$$

So we have:

$$\left(\frac{7}{2}\right)!=\frac{105}{16}\sqrt{\pi}.$$

Also, for negative values of x, we use the following definition:

$$\Gamma(x)=\frac{\Gamma(x+1)}{x}.$$

For example,

$$\Gamma(-\frac{1}{2})=\frac{\Gamma(-\frac{1}{2}+1)}{-\frac{1}{2}}=-2\Gamma(\frac{1}{2})=-2\sqrt{\pi}$$

It can be proved that (which is proved by Weierstrass) [1]

$$\Gamma(x)\Gamma(-x)=-\frac{\pi}{x\,Sin(\pi x)}.$$

Euler for the Gamma function provided another defined as follows:

$$\Gamma(x)=\lim_{n\to\infty}\left\{\frac{n!\,n^x}{x(x+1)(x+2)\cdots(x+n)}\right\}.$$

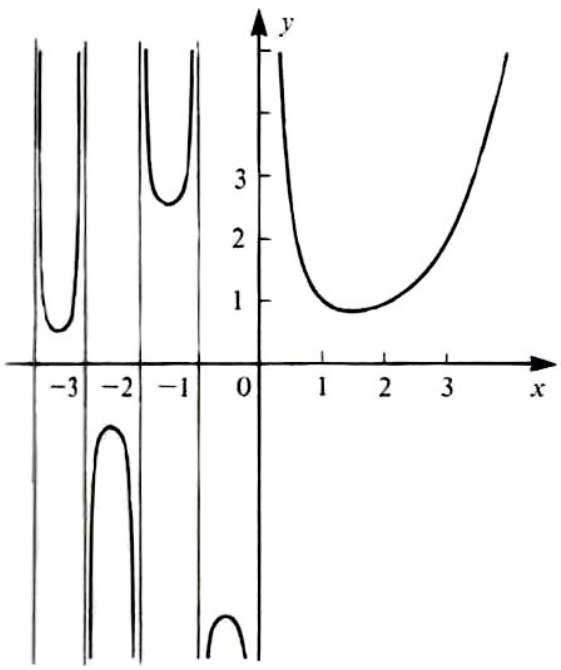

Figure 1-1. Gamma function $\Gamma(x)$

Chart for Gamma function is plotted in Figure 1-1. So, we can accept that for $a=0,-1,-2,\ldots$:

$$\lim_{x\to a}\frac{1}{\Gamma(x)}=0.$$

1.3. Incomplete Gamma Function

Incomplete Gamma function, $\gamma^*(v,x)$, is defined as follows [1]:

$$\gamma^*(v,x)=\frac{1}{\Gamma(v)x^v}\int_0^x \xi^{v-1}e^{-\xi}d\xi.$$

1.4. Beta Function

Beta function is defined as follows [1]:

$$B(x,y)=\int_0^1 t^{x-1}(1-t)^{y-1}dt \qquad x>0,\ y>0$$

And it has the following properties:

1- $B(x,y)=B(y,x)$

2- $B(x,y)=2\int_0^{\frac{\pi}{2}} Sin^{2x-1}(\theta)Cos^{2y-1}(\theta)d\theta$

3- $B(x,y)=\frac{\Gamma(x)\Gamma(y)}{\Gamma(x+y)}$

1.5. Incomplete Beta Function

Incomplete beta function, $B_\tau(x,y)$, is defined as follows [1]:

$$B_\tau(x,y)=\int_0^x \xi^{x-1}(1-\xi)^{y-1}d\xi \qquad 0<\tau<1$$

2. Integral of Fractional Order (Fractional Calculus)

The derivative operator $D=\frac{d}{dx}$ for all those who have studied the normal calculations is introduced. And we know the derivation of n-order of function $f(x)$, i.e. $D^n f(x)=\frac{d^n f(x)}{dx^n}$ where n is a positive integer. (If n is a positive integer, then $D^n f(x)$ is integral of n-order of the function $f(x)$).

Now the question that arises is: If we have $D^v f(x)=\frac{d^v f(x)}{dx^v}$, where v is an arbitrary number (rational, irrational or complex), What is the value of $D^v f(x)$?

Fractional calculus was used initially for solving the Abel integral equations. But later found many applications in different sciences. Such as: Tautochrone, calculation of

Heaviside's operator in physics, Fluid flows and the design of Weir Notch in Civil and Mechanics, Analysis diagrams earthquake in geology and et al.

There are two main methods for defining fractional calculus: One using of integrals and other using of the series. Any method has the features, applications and disadvantages of owning.

2.1. Definitions by Integrals for Integral of Fractional Order

Definition 1. Definition of Riemann [25]

$$ {}_cD_x^{-v} f(x) = \frac{1}{\Gamma(v)} \int_c^x (x-t)^{v-1} f(t)\, dt \quad , \quad \mathrm{Re}(v) > 0 $$

Where indices in ${}_cD_x^v$ indicate, v: order of fractional integrals, c: the lower limit of integration, and x: the upper limit of the integral.

Definition 2. Definition of Liouville [25]

$$ {}_{-\infty}D_x^{-v} f(x) = \frac{1}{\Gamma(v)} \int_{-\infty}^x (x-t)^{v-1} f(t) dt \quad , \quad \mathrm{Re}(v) > 0 $$

Definition 3. Definition of Weyl [25]

$$ {}_xW_\infty^{-v} f(x) = \frac{1}{\Gamma(v)} \int_x^\infty (t-x)^{v-1} f(t) dt \quad , \quad \mathrm{Re}(v) > 0 $$

where is very suitable for periodic functions.

Definition 4. Definition of Riemann - Liouville [25]

Let $\mathrm{Re}(v) > 0$ and $f(x)$ is a point wise continuous function on $J' = (0, \infty)$ and is integral able on any finite interval of $J = [0, \infty)$. Then for all $x > 0$, we have:

$$ {}_0D_x^{-v} f(x) = \frac{1}{\Gamma(v)} \int_0^x (x-t)^{v-1} f(t)\, dt \quad , \quad \mathrm{Re}(v) > 0 $$

The set of all functions that satisfy in this definition, we show with $\mathbf{C}$, and we define $J' = (0, \infty)$, $J = [0, \infty)$.

2.2. Definitions by Series for Integral of Fractional Order

One of the important definitions for fractional calculus by series, as follows:

Definition 5. Definition of Grunwald [25]

Grunwald defined fractional integral of the function $f(x)$ at the point $x = x_0$ as follows:

$$ D^{-v} f(x_0) = \lim_{n\to\infty} \left\{ \frac{1}{\Gamma(v)} \left(\frac{x_0}{n} \right)^v \sum_{k=0}^{n-1} \frac{\Gamma(k+v)}{\Gamma(k+1)} f\left(x_0 - k\frac{x_0}{n}\right) \right\} $$

We can write it, for each x, as follows [15]:

$$ \frac{d^{-v} f}{[d(x-a)]^{-v}} = \lim_{n\to\infty} \left\{ \frac{1}{\Gamma(v)} \left(\frac{x-a}{n} \right)^v \sum_{k=0}^{n-1} \frac{\Gamma(k+v)}{\Gamma(k+1)} f\left(x - k\frac{x-a}{n}\right) \right\} $$

where $a \in R$ is Lower limit of integration and $\mathrm{Re}(v) > 0$.

Now, we show that the above definitions can be obtained with different methods, which shows the importance of these definitions and ideas for a variety of definitions.

2.3. Verification Methods Definitions of Integral of Fractional Order

2.3.1. Method of Iterative Integrals

We consider the ordinary integrals of n-tuple as follows [25]:

$$ {}_cD_x^{-n} f(x) = \int_c^x dx_1 \int_c^{x_1} dx_2 \cdots \int_c^{x_{n-1}} f(t) dt \qquad (2\text{-}1) $$

Where $b > x$ and $f(x)$ is continues function on $[c, b]$. If $n = 2$, we have

$$ {}_cD_x^{-2} f(x) = \int_c^x dx_1 \int_c^{x_1} f(t) dt = \int_c^x (x-t) f(t) dt $$

By repeating this procedure n-times, (2-1) becomes:

$$ {}_cD_x^{-n} f(x) = \int_c^x \frac{(x-t)^{n-1}}{(n-1)!} f(t) dt = \frac{1}{\Gamma(n)} \int_c^x (x-t)^{n-1} f(t) dt \qquad (2\text{-}2) $$

It is clear that the right side (2-2) for each n where $\mathrm{Re}(v) > 0$ is significant. Thus

$$ {}_cD_x^{-v} f(x) = \frac{1}{\Gamma(v)} \int_c^x (x-t)^{v-1} f(t) dt \qquad \mathrm{Re}(v) > 0 $$

That is the definition of Riemann.

2.3.2. Method of Differential Equations

Let $L \equiv D^n + p_1(x) D^{n-1} + \ldots + p_n(x) D^0$ is a linear derivative operator, where the coefficients $p_i(x)$ $(i = 1, \ldots, n)$ are continuous functions on an interval I. Also let $f(x)$ is continues on I and $c \in I$.

We consider the differential equation:

$$ \begin{aligned} &Ly(x) = f(x) \\ &D^k y(c) = 0 \qquad k = 0, 1, \ldots, n-1 \end{aligned} \qquad (2\text{-}3) $$

Unique solution of the equation (2-3) for every $x \in I$ is as follows:

$$ y(x) = \int_c^x G(x, \xi) f(\xi) d\xi \qquad (2\text{-}4) $$

where G is the Green's function corresponding to L [24].

If $\{\varphi_1(x), \ldots, \varphi_n(x)\}$ is any basic set of solution of homogeneous equation $Ly(x) = 0$, then Green's function G can be written as:

$$ G(x, \xi) = \frac{(-1)^{n-1}}{w(\xi)} \begin{vmatrix} \varphi_1(x) & \varphi_2(x) & \cdots & \varphi_n(x) \\ \varphi_1(\xi) & \varphi_2(\xi) & \cdots & \varphi_n(\xi) \\ D\varphi_1(\xi) & D\varphi_2(\xi) & \cdots & D\varphi_n(\xi) \\ \vdots & \vdots & \ddots & \vdots \\ D^{n-2}\varphi_1(\xi) & D^{n-2}\varphi_2(\xi) & \cdots & D^{n-2}\varphi_n(\xi) \end{vmatrix} $$

Where $w(\xi)$ is Wronskian:

$$w(\xi)=\begin{vmatrix} \varphi_1(\xi) & \varphi_2(\xi) & \cdots & \varphi_n(\xi) \\ D\varphi_1(\xi) & D\varphi_2(\xi) & \cdots & D\varphi_n(\xi) \\ \vdots & \vdots & \ddots & \vdots \\ D^{n-1}\varphi_1(\xi) & D^{n-1}\varphi_2(\xi) & & D^{n-1}\varphi_n(\xi) \end{vmatrix}.$$

Now, we assume that $L=D^n$, then (2-3) can be written as follows:

$$\begin{aligned} &D^n y(x)=f(x) \\ &D^k y(c)=0 \qquad k=0,1,\ldots,n-1 \end{aligned} \tag{2-5}$$

And $\{1,x,x^2,\ldots,x^{n-1}\}$ is any basic set of solution of homogeneous equation $D^n y(x)=0$, thus Green's function G is:

$$G(x,\xi)=\frac{(-1)^{n-1}}{w(\xi)}\begin{vmatrix} 1 & x & \cdots & x^{n-1} \\ 1 & \xi & \cdots & \xi^{n-1} \\ 0 & 1 & \cdots & (n-1)\xi^{n-2} \\ \vdots & \vdots & \ddots & \vdots \\ 0 & 0 & \cdots & (n-1)!\xi \end{vmatrix}$$

And Wronskian is:

$$w(\xi)=\begin{vmatrix} 1 & \xi & \cdots & \xi^{n-1} \\ 0 & 1 & \cdots & (n-1)\xi^{n-2} \\ \vdots & \vdots & \ddots & \vdots \\ 0 & 0 & & (n-1)! \end{vmatrix}=\prod_{k=0}^{n-1}(k!)=(n-1)!!$$

Where is independent of ξ.

We see that $G(x,\xi)$ can be transformed into a polynomial of degree $(n-1)$ with a leading coefficient:

$$\frac{(-1)^{n-1}}{(n-1)!!}\left[(-1)^{n+1}(n-2)!!\right]=\frac{1}{(n-1)!}.$$

We know according to properties of the Green function that:

$$\left.\frac{\partial^k}{\partial x^k}G(x,\xi)\right|_{x=\xi}=0 \qquad k=0,1,2,\ldots,n-2$$

So, ξ is a zero of $(n-1)$ order for G. Thus

$$G(x,\xi)=\frac{1}{(n-1)!}(x-\xi)^{n-1}.$$

Thus, from the equations (2-4) and (2-5) we have:

$$D^{-n}f(x)=y(x)=\frac{1}{(n-1)!}\int_c^x (x-\xi)^{n-1}f(\xi)d\xi$$

$$=\frac{1}{\Gamma(n)}\int_c^x (x-\xi)^{n-1}f(\xi)d\xi$$

Where for each number, where the real part is positive, it is meaningful.

Thus, we obtain the definition of Riemann.

It should be noted that the same result can be achieved by using the Laplace's transform, i.e. if $c=0$ equation (2-5) becomes

$$S^n Y(s)=F(s)$$

Where $F(s)$ and $Y(s)$ are Laplace's transforms of $f(x)$ and $y(x)$. Thus

$$Y(s)=S^{-n}F(s)$$

And by Convolution Theorem, we have [8]:

$$y(x)=\frac{1}{\Gamma(n)}\int_0^x (x-\xi)^{n-1}f(\xi)d\xi$$

Thus, we obtain the definition of Riemann - Liouville.

2.3.3. Definition of Weyl

Let $L\equiv D^n+p_1(x)D^{n-1}+\ldots+p_n(x)D^0$.

The adjoint equation for $Ly(x)=0$ is as follows:

$$\begin{aligned} L^* y(x)=&(-1)^n D^n y(x)+(-1)^{n-1}D^{n-1}\left[p_1(x)y(x)\right] \\ &+..+(-1)^0 D^0\left[p_n(x)y(x)\right]=0 \end{aligned}$$

Then, the solution of non-homogeneous equation

$$\begin{aligned} &L^* y(x)=f(x) \\ &D^k y(c)=0 \qquad k=0,1,\ldots,n-1 \end{aligned}$$

is

$$y(x)=\int_c^x G^*(x,\xi)f(\xi)d\xi \tag{2-6}$$

Where G^* is the Green's function corresponding to adjoint operator L^* [24].

However, if $G(x,\xi)$ is the Green's function of L, then [24]:

$$G^*(x,\xi)=-G(\xi,x)$$

Thus, equation (2-6) can be written as:

$$y(x)=\int_x^c G(\xi,x)f(\xi)d\xi$$

Now, we assume that $L=D^n$, then $L^*=(-1)^n D^n$, thus:

$$y(x)=\frac{1}{\Gamma(n)}\int_x^c (\xi-x)^{n-1}f(\xi)d\xi$$

Where for each number, where the real part is positive, it is meaningful.

Thus, let n is v and $c=\infty$, then

$$y(x)=\frac{1}{\Gamma(v)}\int_x^\infty (\xi-x)^{v-1}f(\xi)d\xi \qquad \mathrm{Re}(v)>0$$

Thus, we obtain the definition of Weyl.

2.4. Some Examples of Integral of Fractional Order

Example 1:

1- $$D^{-v}t^{\mu} = \frac{1}{\Gamma(v)}\int_0^t (t-\xi)^{v-1}\xi^{\mu}d\xi = \frac{B(\mu+1,v)}{\Gamma(v)}t^{\mu+v} = \frac{\Gamma(\mu+1)}{\Gamma(\mu+v+1)}t^{\mu+v}$$

Where $v>0$, $t>0$, $\mu>-1$. In particular, if $\mu=0$, integral of fractional order for constant k is:

2- $$D^{-v}k = \frac{k}{\Gamma(v+1)}t^{v} \qquad v>0$$

3- $$D^{-v}e^{at} = \frac{1}{\Gamma(v)}\int_0^t (t-\xi)^{v-1}e^{a\xi}d\xi = \frac{e^{at}}{\Gamma(v)}\int_0^t x^{v-1}e^{-ax}dx = t^{v}e^{at}\gamma^{*}(v,at) \qquad v>0$$

Where $\gamma^{*}(v,x)$ is the incomplete Gamma function. Mainly, fractional integral of an exponential function to represent the following: [25]

$$D^{-v}e^{at} = E_t(v,a) = t^{v}e^{at}\gamma^{*}(v,at) \qquad v>0$$

And the same method can obtain: [25]

4- $$D^{-v}Cos(at) = \frac{1}{\Gamma(v)}\int_0^t \xi^{v-1}Cos(a(t-\xi))d\xi = C_t(v,a) \qquad v>0$$

5- $$D^{-v}Sin(at) = \frac{1}{\Gamma(v)}\int_0^t \xi^{v-1}Sin(a(t-\xi))d\xi = S_t(v,a) \qquad v>0$$

To calculate other trigonometric functions, we can be used of relations, for example,

6- $$D^{-v}Cos^2(at) = D^{-v}\left(\frac{1}{2}+\frac{1}{2}\cos(2at)\right) = \frac{1}{2\Gamma(v+1)}t^{v}+\frac{1}{2}C_t(v,2a)$$

7- $$D^{-v}Sin^2(at) = D^{-v}\left(\frac{1}{2}-\frac{1}{2}\cos(2at)\right) = \frac{1}{2\Gamma(v+1)}t^{v}-\frac{1}{2}C_t(v,2a)$$

8- Let $f(t)=(a-t)^{\lambda}$ where λ is a positive number and $0<t<a$. Then

$$D^{-v}(a-t)^{\lambda} = \frac{1}{\Gamma(v)}\int_0^t (t-\xi)^{v-1}(a-\xi)^{\lambda}d\xi$$

$$= \frac{(a-t)^{\lambda+v}}{\Gamma(v)}\int_0^{t/a} x^{v-1}(1-x)^{-v-\lambda-1}dx$$

$$= \frac{(a-t)^{\lambda+v}}{\Gamma(v)}B_{t/a}(v,-\lambda-v) \qquad \mathrm{Re}(v)>0\ ,\ 0<t<a$$

Where $B_{\tau}(x,y)$ is incomplete Beta function. In the special case, if $\lambda=-\frac{1}{2}$, $v=\frac{1}{2}$, $a=1$ then

$$D^{-\frac{1}{2}}\frac{1}{\sqrt{1-t}} = \frac{1}{\sqrt{\pi}}Ln\frac{1+\sqrt{t}}{1-\sqrt{t}} \qquad 0<t<1$$

9- Let p is a non-negative integer number

$$D^{-v}\left[t^{p}f(t)\right] = \frac{1}{\Gamma(v)}\int_0^t (t-\xi)^{v-1}\left[\xi^{p}f(\xi)\right]d\xi \quad v>0$$

If we consider:

$$\xi^{p} = [t-(t-\xi)]^{p} = \sum_{k=0}^{p}(-1)^{k}\binom{p}{k}t^{p-k}(t-\xi)^{k}$$

And we put in the above equation, we have:

$$D^{-v}\left[t^{p}f(t)\right] = \frac{1}{\Gamma(v)}\sum_{k=0}^{p}(-1)^{k}\binom{p}{k}t^{p-k}\int_0^t (t-\xi)^{v+k-1}f(\xi)d\xi$$

$$= \frac{1}{\Gamma(v)}\sum_{k=0}^{p}(-1)^{k}\binom{p}{k}\Gamma(v+k)t^{p-k}D^{-(v+k)}f(t)$$

$$= \sum_{k=0}^{p}\binom{-v}{k}\left[D^{k}t^{p}\right]\left[D^{-v-k}f(t)\right]$$

Where it's a special case of Leibniz's formula, the general form is shown later.

In all the examples above, we hypothesized that the lower limit of the integral is equal to zero, the definition of Riemann - Liouville, if that were necessary case where the lower limit of the integral is nonzero, we can use the following technique:

$${}_cD_t^{-v}f(t) = \frac{1}{\Gamma(v)}\int_c^t (t-\xi)^{v-1}f(\xi)d\xi \quad v>0, 0\le c<t$$

By changing the variable $\xi=t(1-x)$, we have:

$${}_cD_t^{-v}f(t) = \frac{t^{v}}{\Gamma(v)}\int_0^{\tau} x^{v-1}f(t-tx)dx$$

Where $\tau=\frac{t-c}{t}$

10- $${}_cD_t^{-v}t^{\mu} = \frac{t^{v+\mu}}{\Gamma(v)}\int_0^x x^{v-1}(1-x)^{\mu}dx = \frac{t^{v+\mu}}{\Gamma(v)}B_{\tau}(v,\mu+1)$$

11- $${}_cD_t^{-v}e^{at} = e^{ac}E_{t-c}(v,a)$$

12- $${}_cD_t^{-v}Cos(at) = (Cos(ac))C_{t-c}(v,a) - (Sin(ac))S_{t-c}(v,a)$$

13- $${}_cD_t^{-v}Sin(at) = (Sin(ac))C_{t-c}(v,a) + (Cos(ac))S_{t-c}(v,a)$$

In all cases, if $c=0$, the previous equations are obtained.

3. Derivative of Fractional Order (Fractional Calculus)

The derivative operator $D=\frac{d}{dx}$ for all those who have studied the normal calculations is introduced. And we

know the derivation of n-order of function $f(x)$, i.e. $D^n f(x) = \frac{d^n f(x)}{dx^n}$ where n is a positive integer.

Now, we describe the case where v is an arbitrary number in $D^v f(x)$.

There are two main methods for defining fractional calculus.

3.1. Definitions by Integrals for Derivative of Fractional Order

3.1.1. Using of the Integral of Fractional Order

Definition 6. Let $\mathrm{Re}(v) > 0$, $n = [\mathrm{Re}(v)] + 1$ and $\rho = n - v$, then $0 < \mathrm{Re}(\rho) \le 1$ and derivative of fractional $f(x)$ of order v, for $x > 0$ is

$$ {}_cD_x^v f(x) = {}_cD_x^n \left[{}_cD_x^{-\rho} f(x) \right] $$

Where ${}_cD_x^{-\rho} f(x)$ is integral of fractional order.

Example 2: if $c = 0$ and $\mu > -1$, $f(x) = x^\mu$ then ${}_0D_x^v f(x) = {}_0D_x^n \left[{}_0D_x^{-\rho} f(x) \right]$, and we have

$$ \begin{aligned} {}_0D_x^{-\rho} x^\mu &= \frac{1}{\Gamma(\rho)} \int_0^x (x-t)^{\rho-1} t^\mu dt \\ &= \frac{B(\mu+1,\rho)}{\Gamma(\rho)} x^{\mu+\rho} = \frac{\Gamma(\mu+1)}{\Gamma(\mu+\rho+1)} x^{\mu+\rho} \end{aligned} \quad (3\text{-}1) $$

If $\mathrm{Re}(v) > 0$ and $x > 0$ then

$$ \begin{aligned} {}_0D_x^v x^\mu &= D^n \left[\frac{\Gamma(\mu+1)}{\Gamma(\mu+\rho+1)} x^{\mu+\rho} \right] \\ &= \frac{\Gamma(\mu+1)}{\Gamma(\mu+\rho-n+1)} x^{\mu+\rho-n} \end{aligned} $$

Since $\rho = n - v$, thus

$$ {}_0D_x^v x^\mu = \frac{\Gamma(\mu+1)}{\Gamma(\mu-v+1)} x^{\mu-v} \quad \mathrm{Re}(v) > 0,\ x > 0 \quad (3\text{-}2) $$

By comparing equations (3-1) and (3-2) to conclude that

$$ {}_0D_x^u x^\mu = \frac{\Gamma(\mu+1)}{\Gamma(\mu-u+1)} x^{\mu-u} \quad (3\text{-}3) $$

For $\mu > -1$ and $x > 0$.

To equation (3-3) we are saying *Differintegral*, Namely, if u is a positive number, operation is derivative (differential) and if u is a negative number, operation is integration.

Remark 1: if

$$ {}_cD_x^{-\rho} f(x) = \frac{1}{\Gamma(\rho)} \int_c^x (x-t)^{\rho-1} f(t) dt \quad (3\text{-}4) $$

is definition of Riemann and $\mathrm{Re}(\rho) > 0$ and $f(x)$ is continues function, then derivative of fractional order is *exists*. However, this does not guarantee the existence of fractional derivatives. For example, let $f(x)$ is continues function but it's not differentiable (Such as the Weierstrass function), and $\rho = 1$, then

$$ {}_cD_x^{-1} f(x) = \int_c^x f(t) dt $$

Now, if $v = 1$ then $n = 2$ (as $\rho = n - v$), by equation (3-1) we have

$$ {}_cD_x^1 f(x) = {}_cD_x^2 \left[{}_cD_x^{-1} f(x) \right] = D^2 \int_c^x f(t) dt = Df(x) $$

But by assumption, $f(x)$ is not differentiable.

On the other hand, if $f(x)$ is n-time differentiable, then the equation (3-3) has existed for all $x > 0$, To prove this, By changing the variable $t = x - y^\lambda$ in equation (3-4), where $\lambda = \frac{1}{\rho}$, we have

$$ {}_cD_x^{-\rho} f(x) = \frac{1}{\Gamma(\rho+1)} \int_c^{(x-c)^\rho} f(x - y^\lambda) dy $$

And

$$ \begin{aligned} {}_cD_x^v f(x) &= {}_cD_x^n \left[{}_cD_x^{-\rho} f(x) \right] \\ &= \sum_{k=0}^{n-1} \frac{D^k f(c)}{\Gamma(\rho-n+k+1)} (x-c)^{\rho-n+k} \\ &\quad + \frac{1}{\Gamma(\rho+1)} \int_0^{(x-c)^\rho} \frac{\partial^n}{\partial x^n} f(x - y^\lambda) dy \end{aligned} $$

Or

$$ {}_cD_x^v f(x) = \sum_{k=0}^{n-1} \frac{D^k f(c)}{\Gamma(k-v+1)} (x-c)^{k-v} + D^{-(n-v)} \left(\frac{\partial^n f}{\partial x^n} \right) $$

Where it exists for each $x > 0$, Since $D^n f(x)$ is a continues by assumption.

Therefore, this method is useful in many cases, but in the general case, it's not efficient for functions that are not differentiable of ordinary order.

3.1.2. Definitions of Direct

Definition 7. Definition of Riemann [25]

$$ {}_cD_x^v f(x) = \frac{1}{\Gamma(-v)} \int_c^x (x-t)^{-v-1} f(t)\, dt \ , \ \mathrm{Re}(-v) > 0 $$

Definition 8. Definition of Riemann - Liouville [25]

$$ {}_0D_x^v f(x) = \frac{1}{\Gamma(-v)} \int_0^x (x-t)^{-v-1} f(t)\, dt \ , \ \mathrm{Re}(-v) > 0 $$

Definition 9. Definition of Marchaud [25]

$$ D^v f(x) = \frac{f(x)}{\Gamma(1-v)x^v} + \frac{v}{\Gamma(1-v)} \int_0^x \frac{f(x) - f(t)}{(x-t)^{v+1}} dt,\ 0 < v < 1 $$

Example 3: Let $u > 0$, $f(x) = x^u$ then

$$D^v x^u = \frac{x^{u-v}}{\Gamma(1-v)} + \frac{v}{\Gamma(1-v)} \int_0^x \frac{x^u - t^u}{(x-t)^{v+1}} dt$$

By changing the variable $t = x(1-\xi)$, we have

$$D^v x^u = \frac{x^{u-v}}{\Gamma(1-v)} + \frac{x^{u-v}}{\Gamma(-v)} \int_0^1 \frac{1-(1-\xi)^u}{\xi^{v+1}} d\xi$$

$$= \frac{x^{u-v}}{\Gamma(1-v)} + \frac{x^{u-v}}{\Gamma(1-v)} \left(-1 - vB(-v, u+1)\right)$$

So after simplification, we have:

$$D^v x^u = \frac{\Gamma(u+1)}{\Gamma(u-v+1)} x^{u-v} \qquad u > 0$$

3.2. Definitions by Series for Derivative of Fractional Order

Definition 10. Definition of Grunwald [25]

Grunwald defined fractional derivative of the function $f(x)$ at the point $x = x_0$ as follows:

$$D^v f(x_0) = \lim_{n\to\infty} \left\{ \frac{1}{\Gamma(-v)} \left(\frac{x_0}{n}\right)^{-v} \sum_{k=0}^{n-1} \frac{\Gamma(k-v)}{\Gamma(k+1)} f(x_0 - k\frac{x_0}{n}) \right\} \quad (3\text{-}5)$$

We can write it, for each x, as follows [6,7,15,20]:

$$\frac{d^v f}{[d(x-a)]^v} = \lim_{n\to\infty} \left\{ \begin{array}{l} \frac{1}{\Gamma(-v)} \left(\frac{x-a}{n}\right)^{-v} \\ \sum_{k=0}^{n-1} \frac{\Gamma(k-v)}{\Gamma(k+1)} f(x - k\frac{x-a}{n}) \end{array} \right\} \quad (3\text{-}6)$$

Where $a \in R$ is Lower limit of derivative.

In the definition of Grunwald, We can show that if v is a positive number such as p, then the equation (3-5) by using

$$\frac{\Gamma(k-p)}{\Gamma(-p)} = (-1)^k \frac{\Gamma(p+1)}{\Gamma(p-k+1)}$$

Convert to

$$D^p f(x_0) = \lim_{n\to\infty} \left\{ \left(\frac{x_0}{n}\right)^{-p} \sum_{k=0}^{n-1} (-1)^k \binom{p}{k} f(x_0 - k\frac{x_0}{n}) \right\}$$

Now, we assume $h = \frac{x_0}{n}$, thus

$$D^p f(x_0) = \lim_{h\to 0} \frac{\sum_{k=0}^{p} (-1)^k \binom{p}{k} f(x_0 - kh)}{h^p}.$$

To approximate the derivative of fractional order, on the large n, we have:

$$D^v f(x_0) \cong \frac{1}{\Gamma(-v)} \left(\frac{x_0}{n}\right)^{-v} \sum_{k=0}^{n-1} \frac{\Gamma(k-v)}{\Gamma(k+1)} f(x_0 - k\frac{x_0}{n})$$

4. Properties Fractional Calculus

Now, we express some properties of the operators of differentiation and integration of arbitrary order. [15,25,27,32].

4.1. Linear and Homogeneous

From the definitions introduced in the previous, it is clear that the differintegral is held on the following property:

$$D^v(f_1 + f_2) = D^v f_1 + D^v f_2$$

$$D^v(cf_1) = cD^v f_1 \qquad c \in R$$

4.2. Change of Arguments

When the argument is changed by a factor, Differintegral is held on the following property: [27]

$$\frac{d^v}{dx^v} f(\beta x) = \beta^v \frac{d^v}{[d(\beta x)]^v} f(\beta x)$$

4.3. The Chain Rule

If φ is an analytic function and $f(x)$ is a sufficiently differentiable function, then the chain rule for fractional derivatives is as follows [27]:

$$\frac{d^v \varphi(f(x))}{[d(x-a)]^v} = \frac{(x-a)^{-v} \varphi(f(x))}{\Gamma(1-v)}$$

$$+ \sum_{j=1}^{\infty} vc_j \frac{(x-a)^{j-v}}{\Gamma(j-v+1)} j! \sum_{m=1}^{j} \varphi^{(m)} \sum \prod_{k=1}^{j} \frac{1}{p_k!} \left(\frac{f^{(k)}}{k!}\right)^{p_k}$$

Where $\sum$ can be extended on all nonnegative integer combinations of $p_1, p_2, \ldots, p_n$, such that $\sum_{k=1}^{n} kp_k = n$ and $\sum_{k=1}^{n} p_k = m$.

This is a generalization of the chain rule for ordinary derivatives, but its nature is complex.

4.4. Differintegral by Parts

First consider the case $v \le 0$. Let $\sum f_j$ is uniformly convergent on the $0 < |x-a| < X$, where $X \in R$. Then [27]

$$\frac{d^v}{[d(x-a)]^v} \sum_{j=0}^{\infty} f_j = \sum_{j=0}^{\infty} \frac{d^v f_j}{[d(x-a)]^v} \qquad v \le 0$$

Also, right hand side is uniformly convergent on $0 < |x-a| < X$.

For $v > 0$, if $\sum f_j$ and $\sum \frac{d^v f_j}{[d(x-a)]^v}$ are uniformly convergent on the $0 < |x-a| < X$, then

$$\frac{d^{v}}{[d(x-a)]^{v}}\sum_{j=0}^{\infty} f_j = \sum_{j=0}^{\infty}\frac{d^{v} f_j}{[d(x-a)]^{v}} \qquad v>0$$

On the $0<|x-a|<X$.

4.5. Taylor Series

Osler [28] generalized Taylor series of fractional derivatives. He has proven a very general result. We discuss a special case. This case called the Taylor – Riemann series.

$$f(z)=\sum_{n=-\infty}^{\infty}\frac{(z-z_0)^{n+\gamma}}{\Gamma(n+\gamma+1)}\frac{d^{n+\gamma}}{[d(z-b)]^{n+\gamma}}f(z)\Bigg|_{z=z_0}$$

Where $b\neq z_0$ and $f(z)$ is an analytic function.

4.6. Composition's Rule

Now, we are studying the relationship between these two operators:

$$\frac{d^{v}}{[d(x-a)]^{v}}\frac{d^{\mu}}{[d(x-a)]^{\mu}}f$$

and

$$\frac{d^{v+\mu}}{[d(x-a)]^{v+\mu}}f\ .$$

When the $f=0$, we have:

$$\frac{d^{v}}{[d(x-a)]^{v}}\frac{d^{\mu}}{[d(x-a)]^{\mu}}[0]=\frac{d^{v+\mu}}{[d(x-a)]^{v+\mu}}[0]$$

And Composition's Rule is clear.

When the $f\neq 0$, Composition's Rule is true if

$$f-\frac{d^{-\mu}}{[d(x-a)]^{-\mu}}\frac{d^{\mu}}{[d(x-a)]^{\mu}}f=0$$

And if it's not true, we have

$$\frac{d^{v}}{[d(x-a)]^{v}}\frac{d^{\mu}}{[d(x-a)]^{\mu}}f=\frac{d^{v+\mu}}{[d(x-a)]^{v+\mu}}f$$
$$-\frac{d^{v+\mu}}{[d(x-a)]^{v+\mu}}\left\{f-\frac{d^{-\mu}}{[d(x-a)]^{-\mu}}\frac{d^{\mu}}{[d(x-a)]^{\mu}}f\right\}$$

We can be shown that when $\mu<0$, Composition's Rule is true for any differintegral on function $f(x)$. In fact, if $\frac{f(x)}{(x-a)^{p}}$ is finite in $x=a$, then the Composition's Rule is valid for $\mu<p+1$.

4.7. Dirichlet's Formula and Extension's Rule

We know that if $G(x,y)$ is a continuous function on $[a,b]\times[a,b]$, we have:

$$\int_a^b dx\int_a^x G(x,y)dy=\int_a^b dt\int_y^b G(x,y)dx\ .$$

To show the Dirichlet formula, we assume that F is a continuous function and λ,μ,v are positive numbers, then

$$\int_a^t (t-x)^{\mu-1}dx\int_a^x (y-a)^{\lambda-1}(x-y)^{v-1}F(x,y)dy$$
$$=\int_a^t (y-a)^{\lambda-1}dt\int_y^t (t-x)^{\mu-1}(x-y)^{v-1}F(x,y)dx$$

Example 4: if $\lambda=1, a=0$ and $F(x,y)=f(y)g(x)$, then we have

$$\int_0^t (t-x)^{\mu-1}g(x)dx\int_0^x (x-y)^{v-1}f(y)dy$$
$$=\int_0^t f(y)dt\int_y^t (t-x)^{\mu-1}(x-y)^{v-1}g(x)dx\ .$$

In addition, if $g(x)=1$ then we have

$$\int_0^t (t-x)^{\mu-1}dx\int_0^x (x-y)^{v-1}f(y)dy$$
$$=B(\mu,v)\int_0^t (t-y)^{\mu+v-1}f(y)dt$$

Where B is Beta function.

As a useful application of Dirichlet's formula, we express the extension's rule for fractional integrals:

Theorem 1: Let $f(t)$ is a continues function on J and $v,\mu>0$. Then for any t [25]

$$D^{-v}\left[D^{-\mu}f(t)\right]=D^{-(\mu+v)}f(t)=D^{-\mu}\left[D^{-v}f(t)\right]$$

Proof: By definitions, we have

$$D^{-v}\left[D^{-\mu}f(t)\right]$$
$$=\frac{1}{\Gamma(v)}\int_0^t (t-x)^{v-1}\left[\frac{1}{\Gamma(\mu)}\int_0^x (x-y)^{\mu-1}f(y)dy\right]dx$$
$$=\frac{1}{\Gamma(v)\Gamma(\mu)}\int_0^t (t-x)^{v-1}\int_0^x (x-y)^{\mu-1}f(y)dydx$$
$$=\frac{B(\mu,v)}{\Gamma(v)\Gamma(\mu)}\int_0^t (t-y)^{v+\mu-1}f(y)dy$$
$$=\frac{1}{\Gamma(\mu+v)}\int_0^t (t-y)^{v+\mu-1}f(y)dy$$
$$=D^{-(\mu+v)}f(t).\ \square$$

Theorem 1 is established for $\mu=0$ (or $v=0$) If $D^0=I$ is an operator identity.

Example 5: If $f(t)=e^{at}$, Since e^{at} is a continues function, we have

$$D^{-v}\left[D^{-\mu}e^{at}\right]=D^{-(\mu+v)}e^{at} \qquad \mu,v>0$$

And we have $D^{-(\mu+v)}e^{at}=E_t(\mu+v,a)$ and $D^{-v}\left[D^{-\mu}e^{at}\right]=D^{-v}E_t(\mu,a)$. So,

We obtained the following useful recursive relation:

$$D^{-v}E_t(\mu,a)=E_t(\mu+v,a) \qquad \mu>-1\ ,\ v>0$$

(Assuming strong $\mu>-1$)

And, in the same method, we can obtain:

$$D^{-v}C_t(\mu,a)=C_t(\mu+v,a) \qquad \mu>-1\ ,\ v>0$$

$$D^{-v}S_t(\mu,a)=S_t(\mu+v,a) \qquad \mu>-2\ ,\ v>0$$

4.8. Derivatives of fractional Integrals and Integrals of Fractional Derivatives

Theorem 2: Let $f(t)$ is a continues function on J and $v>0$. Then [25]

a) If Df is in class $\mathbf{C}$, then

$$D^{-v-1}\left[Df(t)\right]=D^{-v}f(t)-\frac{f(0)}{\Gamma(v+1)}t^{v}$$

b) If Df is a continues function on J. Then for any $t>0$

$$D\left[D^{-v}f(t)\right]=D^{-v}\left[Df(t)\right]+\frac{f(0)}{\Gamma(v)}t^{v-1}$$

Proof: a) let $\varepsilon>0$ and $\eta>0$. Then the derivatives of $(t-\xi)^{v-1}$ and $f(\xi)$ are continuous functions on $[\eta,t-\varepsilon]$. Therefore, the integration by parts shows that:

$$\int_{\eta}^{t-\varepsilon}(t-\xi)^{v}\left[Df(\xi)\right]d\xi=v\int_{\eta}^{t-\varepsilon}(t-\xi)^{v-1}f(\xi)d\xi + \varepsilon^{v}f(t-\varepsilon)-(t-\eta)^{v}f(\eta)$$

We take the limit when ε,η tended to zero, and we divided into $\Gamma(v+1)$, then part (a) is proofed.

b) By changing the variable $\xi=t-x^{\lambda}$, where $\lambda=\frac{1}{v}$, we have

$$D^{-v}f(t)=\frac{1}{\Gamma(v)}\int_{0}^{t}(t-\xi)^{v-1}f(\xi)d\xi$$

$$=\frac{1}{\Gamma(v+1)}\int_{0}^{t^{v}}f(t-x^{\lambda})dx$$

Then for any $t>0$

$$D\left[D^{-v}f(t)\right]=\frac{1}{\Gamma(v+1)}\left[f(0)\left(vt^{v+1}\right)+\int_{0}^{t^{v}}\frac{\partial}{\partial t}f(t-x^{\lambda})dx\right]$$

Changing the variable will be returned, and then part (b) is proofed. □

Example 6: If $f(t)=e^{at}$, According to (a) in theorem 2, we have

$$D^{-v-1}\left[ae^{at}\right]=D^{-v}\left[e^{at}\right]-\frac{t^{v}}{\Gamma(v+1)}$$

By using Example 1 part 3, we have

$$aE_t(v+1,a)=E_t(v,a)-\frac{t^{v}}{\Gamma(v+1)}$$

i.e.

$$E_t(v+1,a)=\frac{1}{a}E_t(v,a)-\frac{1}{a}\frac{t^{v}}{\Gamma(v+1)}$$

The result is a recursive relation for E_t. Similarly, we can obtain:

$$DC_t(v,a)=-aS_t(v,a)+\frac{t^{v-1}}{\Gamma(v)}$$

$$DS_t(v,a)=aC_t(v,a)$$

Theorem 3: Let p is a positive number and $D^{p-1}f$ is a continues function on J and $v>0$. Then [25]

a) If $D^{p}f$ is in class $\mathbf{C}$, then

$$D^{-v}f(t)=D^{-(p+v)}\left[D^{p}f(t)\right]+Q_p(t,v)$$

b) If $D^{p}f$ is a continues function on J. Then for any $t>0$

$$D^{p}\left[D^{-v}f(t)\right]=D^{-v}\left[D^{p}f(t)\right]+Q_p(t,v-p)$$

Where

$$Q_p(t,v)=\sum_{k=0}^{p-1}\frac{t^{v+k}}{\Gamma(v+k+1)}D^{k}f(0).\square$$

Theorem 4: Let p is a positive number and $v>p$ and f has a continuous derivative on J. Then for any $t\in J$ [25]

$$D^{p}\left[D^{-v}f(t)\right]=D^{-(v-p)}f(t).\square$$

Theorem 5: Let p,q are positive integer number and μ,v are positive number such that $p-v=q-\mu$ and f has r-time continuous derivatives on J where $r=Max\{p,q\}$. Then for any $t\in J$

$$D^{-v}\left[D^{p}f(t)\right]=D^{-\mu}\left[D^{q}f(t)\right] + Sgn(q-p)\sum_{k=s}^{r-1}\frac{t^{v-p+k}}{\Gamma(v-p+k+1)}D^{k}f(0) \qquad (4\text{-}1)$$

Where $s=Min\{p,q\}$ and $Sgn(x)$ is sign function. And for any $t\in J'$

$$D^{q}\left[D^{-\mu}f(t)\right]=D^{p}\left[D^{-v}f(t)\right]. \qquad (4\text{-}2)$$

Proof: if $p=q$ it's clear. Let $q>p$, and $\delta=q-p>0$ therefore $\mu=v+\delta>0$. By theorem 3, we have:

$$D^{-v}\left[D^{p}f(t)\right]$$
$$=D^{-p-\delta}\left[D^{\delta+p}f(t)\right]+\sum_{k=0}^{\delta-1}\frac{t^{v+k}}{\Gamma(v+k+1)}D^{p+k}f(0)$$

Since $v+\delta=\mu$ and $\delta+p=q$ then the equation (4-1) is true.

For proof equation (4-2), by theorem 4, we have

$$D^{\delta}\left[D^{-v-\delta}f(t)\right]=D^{-v}f(t)$$

With p-time derivative, we have:

$$D^{\delta+p}\left[D^{-v-\delta}f(t)\right]=D^{p}\left[D^{-v}f(t)\right]$$

Since $v+\delta=\mu$ and $\delta+p=q$ then equation (4-2) is true.□

4.9. Laplace Transforms of the Integral of Fractional Order

We say the function $f(t)$ is of α exponential order, If there are positive constants such as T,M such that for any $t\geq T$

$$e^{-\alpha t}\left|f(t)\right|\leq M$$

If $f(t)$ is in class **C** and it's of α exponential order, then

$$\int_0^\infty e^{-st}f(t)dt$$

is exist, for any s such that $\mathrm{Re}(s)>\alpha$. we call the Laplace transform of $f(t)$, and write:

$$F(s)=L\{f(t)\}=\int_0^\infty e^{-st}f(t)dt$$

And also write:

$$f(t)=L^{-1}\{F(s)\}$$

i.e., $f(t)$ is the inverse Laplace transform (unique) of $F(s)$.

Functions $Cos(at),(\mu>0)$ $t^{\mu-1}e^{at},e^{at},(\mu>-1)$ t^{μ} and $Sin(at)$ are in class **C**, and they are of exponential order. So

$$L\left\{t^{\mu}\right\}=\frac{\Gamma(\mu+1)}{s^{\mu+1}}\qquad \mu>-1$$
$$L\left\{e^{at}\right\}=\frac{1}{s-a}$$
$$L\left\{t^{\mu-1}e^{at}\right\}=\frac{\Gamma(\mu)}{(s-a)^{\mu}}\qquad \mu>0$$
$$L\{Cos(at)\}=\frac{s}{s^2+a^2}$$
$$L\{Sin(at)\}=\frac{a}{s^2+a^2}$$

One of the very useful properties of the Laplace transform is in the Convolution theorem [8]. The theorem shows that the Laplace transform of the convolution of two functions is multiplication the Laplace transforms of them. i.e.

$$L\left\{\int_0^t f(t-\xi)g(\xi)d\xi\right\}=F(s)G(s).$$

Now, if $f(t)$ is in class **C**, then fractional integral of $f(t)$ of order v:

$$D^{-v}f(t)=\frac{1}{\Gamma(v)}\int_0^t(t-\xi)^{v-1}f(\xi)d\xi\qquad v>0$$

is a Convolution. Therefore, if $f(t)$ is of exponential order then

$$L\left\{D^{-v}f(t)\right\}=\frac{1}{\Gamma(v)}L\left\{t^{v-1}\right\}.L\{f(t)\}\qquad (4\text{-}3)$$

$$=s^{-v}F(s)\qquad v>0\qquad (4\text{-}4)$$

Equation (4-4) is true for $v=0$, but the equation (4-3) is not true, although

$$\lim_{v\to 0}L\left\{\frac{t^{v-1}}{\Gamma(v)}\right\}=1.\qquad (4\text{-}5)$$

Example 7:

$$L\left\{D^{-v}t^{\mu}\right\}=\frac{\Gamma(\mu+1)}{s^{\mu+v+1}}\qquad \mu>-1$$
$$L\left\{D^{-v}e^{at}\right\}=\frac{1}{s^{v}(s-a)}\qquad v>0$$
$$L\left\{D^{-v}t^{\mu-1}e^{at}\right\}=\frac{\Gamma(\mu)}{s^{v}(s-a)^{\mu}}\qquad v>0\ ,\ \mu>0$$
$$L\left\{D^{-v}Cos(at)\right\}=\frac{s}{s^{v}(s^2+a^2)}\qquad v>0$$
$$L\left\{D^{-v}Sin(at)\right\}=\frac{a}{s^{v}(s^2+a^2)}\qquad v>0$$

Now, we try to calculate the Laplace transform of fractional integral of the derivative and the Laplace transform of derivatives of fractional integral.

Let $f(t)$ is continues function on J and Df is in class **C** and it's of exponential order, then by equation (4-4) we have

$$L\left\{D^{-v}\left[Df(t)\right]\right\}=s^{-v}L\{Df(t)\}$$
$$=s^{-v}\left[sF(s)-f(0)\right]\qquad v>0\qquad (4\text{-}6)$$

Since, $f(t)$ is continues function on J then $f(0)$ is exist. Therefore, we obtained the Laplace transform of fractional integral of the derivative. This formula for $v=0$ is obvious.

By theorem 2 part (b), we have

$$L\left\{D\left[D^{-v}f(t)\right]\right\}$$
$$= L\left\{D^{-v}\left[Df(t)\right]\right\} + f(0)L\left\{\frac{t^{v-1}}{\Gamma(v)}\right\} \qquad (4\text{-}7)$$
$$= s^{-v}\left[sF(s) - f(0)\right] + s^{-v}f(0)$$
$$= s^{1-v}F(s) \qquad v > 0$$

Therefore, we obtained the Laplace transform of derivatives of fractional integral.

By equation (4-6), let $v = 0$, we have $L\{Df(t)\} = sF(s) - f(0)$, but by the equation (4-7), we have $L\{Df(t)\} = sF(s)$. This "unconformity" occurs from this fact that:

$$\lim_{v\to 0}\frac{t^{v-1}}{\Gamma(v)} = 0 \qquad (4\text{-}8)$$

By comparing equations (4-5) and (4-8), we conclude that the " $L\{.\}$ " and " $\lim$ " are not commutative.

Thus, we can show that:

$$L\{E_t(v,a)\} = \frac{1}{s^v(s-a)} \qquad v > 0$$
$$L\{C_t(v,a)\} = \frac{s}{s^v(s^2+a^2)} \qquad v > 0$$
$$L\{S_t(v,a)\} = \frac{a}{s^v(s^2+a^2)} \qquad v > 0$$

4.10. Leibniz's Formula

Leibniz classical formula (i.e. $n \in N$) is as follows:

$$D^n\left[f(t)g(t)\right] = \sum_{k=0}^{n}\binom{n}{k}\left[D^k g(t)\right]\left[D^{n-k}f(t)\right]$$

where $f(t)$ and $g(t)$ are n-time differentiable functions.

Now, we want to express the Leibniz formula for fractional operators.

Theorem 6: Let $f(t)$ is a continues function on $[0, X]$ and $g(t)$ is an analytic function for any $a \in [0, X]$. Then for any $v > 0$ and $0 < t \le X$, we have [25]

$$D^{-v}\left[f(t)g(t)\right] = \sum_{k=0}^{\infty}\binom{-v}{k}\left[D^k g(t)\right]\left[D^{-v-k}f(t)\right]\square$$

Osler, a general result, proved to differintegral, where its expressed as follows: [28]

$$D^v\left[f(t)g(t)\right]$$
$$= \sum_{j=-\infty}^{\infty}\frac{\Gamma(v+1)}{\Gamma(v-\gamma-j+1)\Gamma(\gamma+j+1)}\left[D^{\gamma+j}g(t)\right]\left[D^{v-j-\gamma}f(t)\right]$$

where γ is arbitrary constant.

5. Fractional Differentiable

Now, we want to express some necessary conditions for that the fractional derivative of a function is exist [15,30].

Definition 11: f is said to have an α th derivative, where $0 \le k < \alpha < k+1$ for integer k, if $D^{-\beta}f$ (in the Weyl sense), with $\beta = k+1-\alpha$, has $k+1$ Peano derivatives at x_0, That is, there exists a polynomial $P_{x_0}(t)$ of degree $\le k+1$ s.t.

$$\left(D^{-\beta}f\right)(x_0+t) - P_{x_0}(t) = o\left(|t|^{k+1}\right) \qquad t \to 0$$

Further if

$$\left\{\frac{1}{\rho}\int_{-\rho}^{\rho}\left|\left(D^{-\beta}f\right)(x_0+t) - P_{x_0}(t)\right|^p dt\right\}^{\frac{1}{p}} = o\left(\rho^{k+1}\right), 1 \le p < \infty$$

f is said to have an α th derivative in the L^p sense.

It is clear that this definition of fractional differentiability is *not local*. Particularly the behavior of the function at $-\infty$ also plays a crucial role. The main results can be stated using this notion of differentiability and involve the classes Λ_α^p, Λ_α and N_α^p which are given by the following definitions.

Definition 12: If there exists a polynomial $Q_{x_0}(t)$ of degree $\le k$ s. t. $f(x_0,t) - Q_{x_0}(t) = O(|t|^\alpha)$ as $t \to 0$ then f is said to satisfy the condition Λ_α, Or in simpler terms, Λ_α is the set of all functions that satisfy in the Holder exponents of an α order exponential.

Definition 13: If $f \in \Lambda_\alpha$ and Further

$$\left\{\frac{1}{\rho}\int_{-\rho}^{\rho}\left|f(x_0+t) - Q_{x_0}(t)\right|^p dt\right\}^{\frac{1}{p}} = o\left(\rho^k\right), 1 \le p < \infty$$

f is said to satisfy the condition Λ_α^p.

Definition 14: f is said to satisfy the condition N_α^p if for some $\rho > 0$

$$\frac{1}{\rho}\int_{-\rho}^{\rho}\frac{\left|f(x_0+t) - Q_{x_0}(t)\right|^p}{|t|^{1+p\alpha}}dt \quad < \infty.$$

Now, we express the main results in four theorems (without proof) [15,30].

Theorem 7: Suppose that f satisfies the condition Λ_α at every point of a set E of positive measure. Then $D^\alpha f(x)$ exists almost everywhere in E if and only if f satisfied condition N_α^2 almost everywhere in E.□

Theorem 8: The necessary and sufficient condition that f satisfies the condition N_α almost everywhere in a set E is that f satisfies the condition Λ_α^2 and $D^\alpha f$ exists in the L^2 sense, almost everywhere in this set.□

Theorem 9: Let $0 \le \alpha < 1$, $\beta > 0$ and suppose that $f \in \Lambda_\alpha$. Then $D^{-\beta}f \in \Lambda_{\alpha+\beta}$ if $\alpha + \beta < 1$. □

Theorem 10: Let $0<\gamma<\alpha<1$ Then $D^{\gamma} f \in \Lambda_{\alpha-\gamma}$ if $f \in \Lambda_{\alpha}$.□

Despite their merits, these results are not really suitable and adequate to obtain information regarding irregular behavior of functions and Holder exponents. We observe that the Weyl definition involves highly nonlocal information and hence is somewhat unsuitable for the treatment of local scaling behavior.

6. Local Fractional Derivatives (LFD)

The definition of the fractional derivative was discussed in the last chapter. These derivatives differ in some aspects from integer order derivatives. In order to see this, one may note, from definition 6, that except when v is a positive integer, the v th derivative is nonlocal as it depends on the lower limit 'c'. The same feature is also shown by other definitions. However, we wish to study local scaling properties and hence we need to modify this definition accordingly. Secondly from example 1 part 2, it is clear that the fractional derivative of a constant function is not zero. Therefore adding a constant to a function alters the value of the fractional derivative. This is an undesirable property of the fractional derivatives to study fractional differentiability. While constructing local fractional derivative operator, we have to correct for these two features. This forces one to choose the lower limit as well as the additive constant before hand.

The most natural choices are as follows.

1) We subtract, from the function, the value of the function at the point where we want to study the local scaling property. This makes the value of the function zero at that point, canceling the effect of any constant term.

2) The natural choice of a lower limit will again be that point itself, where we intend to examine the local scaling.

Definition 15: If, for a function $f:[0,1]\to R$, the limit

$$\tilde{D}^{v} f(y)=\lim_{x\to y}\frac{d^{v}\left(f(x)-f(y)\right)}{\left(d(x-y)\right)^{v}} \qquad , \ 0<v\le 1$$

is exists and finite, then we say that the local fractional derivative (LFD) of the order v (denoted by $\tilde{D}^{v} f(y)$), at y, exists. [15]

This defines the LFD for $0\le v<1$. We generalized to include all positive values of v as follows. [10]

Definition 16: If, for a function $f:[0,1]\to R$, the limit

$$\tilde{D}^{v} f(y)=\lim_{x\to y}\frac{d^{v}\left(f(x)-\sum_{n=0}^{N}\frac{f^{(n)}(y)}{\Gamma(n+1)}(x-y)^{n}\right)}{\left(d(x-y)\right)^{v}}$$

exists and is finite, where N is the largest integer for which N the derivative of f at y exists and is finite, then we say that the local fractional derivative (LFD) of the order v ($N<v\le N+1$), at $x=y$, exists.

Definition 17: The critical order α, at y, of a function f is

$$\alpha(y)=Sup\left\{v \mid \tilde{D}^{u} f(y) \quad for \quad \mathrm{u}<v \quad is \quad exists\right\}.$$

Sometimes it is essential to distinguish between limits, and hence the critical order, taken from above and below. In that case we define

$$\tilde{D}_{\pm}^{v} f(y)=\lim_{x\to y^{\pm}}\frac{d^{v}\left(f(x)-\sum_{n=0}^{N}\frac{f^{(n)}(y)}{\Gamma(n+1)}(x-y)^{n}\right)}{\left(d\pm(x-y)\right)^{v}}$$

We will assume $\tilde{D}^{v}=\tilde{D}_{+}^{v}$ unless mentioned otherwise.

The local fractional derivative that we have defined above reduces to the usual derivatives of integer order when v is a positive integer, where this study is simple.

It is clear that in our construction local fractional derivatives generalize the usual derivatives in fractional order keeping the local nature of the derivative operator intact, in contrast to other definitions of fractional derivatives. The local nature of the operation of derivation is crucial at many places, for instance, in studying the differentiable structure of complicated manifolds, studying evolution of physical systems locally, etc. The virtue of such a local quantity will be evident in the following section where we show that the local fractional derivative appears naturally in the fractional Taylor expansion. This will imply that the LFDs are not introduced in an ad hoc manner merely to satisfy the two conditions mentioned in the beginning, but they have their own importance.

6.1. Local Fractional Taylor Expansion

In order to derive local fractional Taylor expansion, let [9,15]

$$F(y,x-y;v)=\frac{d^{v}\left(f(x)-f(y)\right)}{\left(d(x-y)\right)^{v}}$$

It is clear that

$$\tilde{D}^{v} f(y)=F(y,0;v)$$

Now, for $0<v\le 1$

$$\begin{aligned} f(x)-f(y)&=\frac{d^{-v}}{\left(d(x-y)\right)^{-v}}\frac{d^{v}}{\left(d(x-y)\right)^{v}}f \\ &=\frac{1}{\Gamma(v)}\int_{0}^{x-y}\frac{F(y,t;v)}{(x-y-t)^{-v+1}}dtQ \\ &=\frac{1}{\Gamma(v)}\left[F(y,t;q)\int (x-y-t)^{v-1}dt\right]_{0}^{x-y} \\ &\quad+\frac{1}{\Gamma(v)}\int_{0}^{x-y}\frac{dF(y,t;v)}{dt}\frac{(x-y-t)^{v}}{v}dt \end{aligned}$$

provided the last term exists. Thus

$$\begin{aligned} f(x)-f(y)&=\tilde{D}^{v} f(y)\frac{(x-y)^{v}}{\Gamma(v+1)} \\ &\quad+\frac{1}{\Gamma(v+1)}\int_{0}^{x-y}\frac{dF(y,t;v)}{dt}(x-y-t)^{v}dt \end{aligned} \tag{6-1}$$

i.e.

$$f(x)=f(y)+\tilde{D}^{v} f(y)\frac{(x-y)^{v}}{\Gamma(v+1)}+R_{v}(x,y) \tag{6-2}$$

where $R_v(x,y)$ is a remainder given by

$$R_v(x,y)=\frac{1}{\Gamma(v+1)}\int_0^{x-y}\frac{dF(y,t;v)}{dt}(x-y-t)^v\,dt$$

Equation (6-2) is a fractional Taylor expansion of $f(x)$ involving only the lowest and the second leading terms. Using the general definition of *LFD* and following similar steps one arrives at the fractional Taylor expansion for $N<v\le N+1$ (provided $\tilde{D}^v$ exists), given by,

$$f(x)=\sum_{n=0}^{N}\frac{f^{(n)}(y)}{\Gamma(n+1)}f(y)+\tilde{D}^v f(y)\frac{(x-y)^v}{\Gamma(v+1)}+R_v(x,y) \tag{6-3}$$

Where

$$R_v(x,y)=\frac{1}{\Gamma(v+1)}\int_0^{x-y}\frac{dF(y,t;v)}{dt}(x-y-t)^v\,dt\,.$$

We note that the local fractional derivative (not just fractional derivative) as defined above provides the coefficient A in the approximation of $f(x)$ by the function $f(y)+\frac{A}{\Gamma(v+1)}(x-y)^v$, for $0<v\le 1$, in the vicinity of y. We further note that the terms on the RHS of equation (6-1) are nontrivial and finite only in the case $v=\alpha$.

Let us consider the function $f(x)=x^\alpha$, where $x,\alpha\ge 0$, Then $\tilde{D}^\alpha f(0)=\Gamma(\alpha+1)$ and using equation (6-3) at $y=0$ we get $f(x)=x^\alpha$ since the remainder term turns out to be zero.

6.2. Geometrical Interpretation of LFD

Clearly, integrals and derivatives of the integer order having simple geometrical and physical interpretation, which can be used to solve application problems in various sciences. But, in integrals and derivatives of the fractional order, it is not easy [15,25]. The idea of integrals and derivatives of arbitrary order (not necessarily an integer), specific geometric and physical interpretation for these operators, to more than 300 years was not expressed. The lack of this interpretation, in the First International Conference for Fractional Calculus in the New Haven U.S. in 1974 led to that this question be considered as an open problem [32], and the future conferences, such as the University of British Astrakly in 1984 [23] and Nihon University in Japan in 1990 [26], this question is not answered. Although, there were various discussions on this issue, the problem was not solved until 1996. However, later that year, fairly satisfactory answers were given to this question [14,22,29].

Whereas, the local fractional Taylor expansion of section 6.1 suggests a possibility of such an interpretation for *LFD* s. In order to see this note that when v is set equal to unity in the equation (6-2) one gets the equation of the tangent. It may be recalled that all the curves passing through a point y and having the same tangent form an equivalence class (which is modeled by a linear behavior). Analogously all the functions (curves) with the same critical order α and the same $\tilde{D}^\alpha$ will form an equivalence class modeled by x^α (If f differs from x^α by a logarithmic correction then terms on the RHS of equation (6-1) do not make sense like in the ordinary calculus). This is how one may generalize the geometric interpretation of derivatives in terms of 'tangents'. This observation is useful when one wants to approximate an irregular function by a piecewise smooth (scaling) function.

6.3. Generalization to Higher Dimensional Functions

The definition of the Local fractional derivative can be generalized for higher dimensional functions in the following manner [15,16,17].

Definition 18: Let $f:R^n\to R$, We define

$$\Phi(\mathbf{Y},t)=f(\mathbf{Y}+\mathbf{V}t)-f(\mathbf{Y})\qquad \mathbf{V}\in R^n\,,\ t\in R$$

Then the directional- *LFD* of f at y of order v, $0<v<1$, in the direction $\mathbf{V}$ is given (provided it exists) by

$$\tilde{D}^v_{\mathbf{V}}f(y)=\left.\frac{d^v\Phi(\mathbf{Y},t)}{dt^v}\right|_{t=0}$$

where the RHS involves the usual fractional derivative of equation (3-6). The directional *LFD* s along the unit vector e_i will be called i th partial- *LFD*.

7. Applications of Fractional Calculus

7.1. Abel's Integral Equation and the Tautochrone Problem

Abel was the first to solve an integral equation by means of the fractional calculus. Perhaps even more important, our derivation below will furnish an example of how the Riemann-Liouville fractional integral arises in the formulation of physical [25].

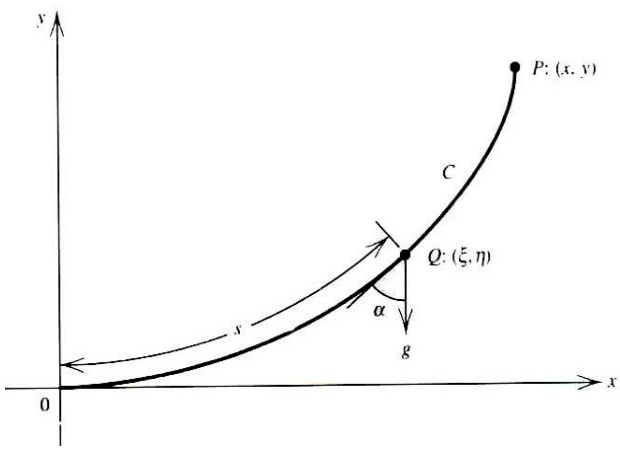

Figure 7-1. Abel's Tautochrone Problem

Suppose, then, that a thin wire C is placed in the first quadrant of a vertical plane and that a frictionless bead

slides along the wire under the action of gravity (see Figure 7-1). Let the initial velocity of the bead be zero. Abel set himself the problem of finding the shape of the curve C for which the time of descent T from P to the origin is independent of the starting point. Such a curve is called a *tautochrone*.

Abel's tautochrone problem should not be confused with the brachistochrone problem in the calculus of variations. That problem was to find the shape of the curve C such that the time of descent of the bead from P to O would be a minimum. This question was discussed as early as 1630 by Galileo; but it was not until 1696 that Johann Bernoulli formulated and solved the problem of finding "the curve of quickest descent." In this case the brachistochrone is a *cycloid*.

We now proceed to formulate Abel's problem. Let s be the arc length measured along C from O to an arbitrary point $Q(\xi,\eta)$ on C, and let a be the angle of inclination (see Figure 7-1). Then $-gCos(\alpha)$ is the acceleration d^2s/dt^2 of the bead, where g is the gravitational constant, and

$$\frac{d\eta}{ds} = Cos(\alpha).$$

Hence we have the differential equation

$$\frac{d^2s}{dt^2} = -g\frac{d\eta}{ds}.$$

With the aid of the integrating factor $\frac{ds}{dt}$, we see immediately that

$$\left(\frac{ds}{dt}\right)^2 = -2g\eta + k \tag{7-1}$$

where k is a constant of integration. Since the bead started from rest, $\frac{ds}{dt}$ is zero when $\eta = y$, and thus $k = 2gy$. We therefore may write (7-1) as

$$\frac{ds}{dt} = -\sqrt{2g(y-\eta)}$$

The negative square root is chosen since as t increases, s decreases. Thus the time of descent T from P to O is

$$T = -\frac{1}{\sqrt{2g}}\int_p^0 \frac{1}{\sqrt{y-\eta}}ds.$$

Now the arc length s is a function of η, say $s = h(\eta)$, where h depends on the shape of the curve C. Therefore,

$$T = -\frac{1}{\sqrt{2g}}\int_y^0 (y-\eta)^{-\frac{1}{2}}[h'(\eta)d\eta]$$

Or

$$\sqrt{2g}T = \int_0^y (y-\eta)^{-\frac{1}{2}}h'(\eta)d\eta \tag{7-2}$$

where

$$h'(\eta) = \frac{ds}{d\eta}. \tag{7-3}$$

If we let

$$f(y) = h'(y) \tag{7-4}$$

then the integral equation of (7-2) may be written in the notation of the fractional calculus as

$$\frac{\sqrt{2g}}{\Gamma(\frac{1}{2})}T = D^{-\frac{1}{2}}f(y) \tag{7-5}$$

But the right-hand side of (7-5) is the Riemann-Liouville fractional integral of f of order $\frac{1}{2}$. This is our desired formulation. It remains then to solve (7-5) and then find the equation of C.

Abel attacked the first problem by applying the fractional operator $D^{\frac{1}{2}}$ to both sides of (7-5) and writing

$$D^{\frac{1}{2}}\sqrt{\frac{2g}{\pi}}\,T = f(y). \tag{7-6}$$

Now we know from Theorem 1, that this is legitimate if f and T are of class $\mathbf{C}$. But a constant is certainly of class $\mathbf{C}$, and since $D^{\frac{1}{2}}\,T = \frac{T}{\sqrt{\pi y}}$, we see that f also is of class $\mathbf{C}$. Thus (7-6) becomes

$$f(y) = \frac{\sqrt{2g}}{\pi}\,T\,y^{-\frac{1}{2}} \tag{7-7}$$

which is the solution of (7-5) [or (7-2)].

Now, to solve the second part of the problem, that is, to find the equation of C, we begin by using (7-3) and (7-4) to write

$$f(y) = h'(y) = \frac{ds}{dy} = \sqrt{1+\left(\frac{dx}{dx}\right)^2}.$$

Thus

$$\frac{dx}{dy} = \sqrt{f^2(y)-1}$$

Or

$$x = \int_0^y \sqrt{\frac{2gT^2}{\pi^2\eta}-1}\,d\eta + c \tag{7-8}$$

But $c = 0$ since at the origin $x = 0 = y$.

If we let $a = \frac{gT^2}{\pi^2}$, then the change of variable of integration $\eta = 2a\,Sin^2\xi$ reduces (7-8) to

$$x = 4a\int_0^\beta Cos^2(\zeta)d\zeta$$

where

$$\beta = arcSin\left(\sqrt{\frac{y}{2a}}\right).$$

These last two equations then imply that

$$x = 2a\left(\beta + \frac{1}{2}Sin(2\beta)\right)$$

$$y = 2aSin^2(\beta)$$

and if we make the trivial change of variable $\theta = 2\beta$, the parametric equations of C become

$$\begin{aligned} x &= a\left(\theta + Sin(\theta)\right) \\ y &= a\left(1 - Cos(\theta)\right) \end{aligned} \quad \left(a = \frac{gT^2}{\pi^2}\right) \tag{7-9}$$

The solution of our problem is now complete. We see from (7-9) that C is a *cycloid*.

7.2. Heaviside Operational Calculus and the Fractional Calculus

G. W. Hill had the daring to publish in 1877 a paper on the problem of the moon's perigee in which he used determinants of infinite order. Hill's novel method was open to serious questions from the standpoint of rigorous analysis until H. Poincare in 1886 proved the convergence of infinite determinants [25].

A somewhat similar history followed Oliver Heaviside's publication in 1893 of certain methods for solving linear differential equations (known today as the Heaviside operational calculus) except that in this case, a much longer period elapsed before his procedures were put on a firm foundation by T. J. Bromwich in 1919 and J. R. Carson in 1922.

We illustrate Heaviside's methods by applying them to a particular partial differential equation. The partial differential equation we consider is

$$\frac{\partial^2 u}{\partial x^2} = a^2 \frac{\partial u}{\partial t}. \tag{7-10}$$

If u is interpreted as temperature, then (7-10) is the heat equation in one dimension. If u is interpreted as voltage or current, (7-10) is called the submarine cable equation (Depending on intended equation, a^2 constant will change).

Let us assume that (7-10) is the heat equation. Let

$$u(x,0) = 0 \qquad x > 0 \tag{7-11a}$$

be the initial condition and

$$u(0,t) = u_0 \tag{7-11b}$$

(where u_0 is a given constant) be the boundary condition.

We shall solve (7-10) together with (7-11) using Heaviside's arguments. He introduced the letter p to represent $\frac{\partial}{\partial t}$, i.e. $p = \frac{\partial}{\partial t}$.

In this notation we may write (7-10) as

$$\frac{\partial^2 u}{\partial x^2} = a^2 pu \tag{7-12}$$

Now he assumed that p was a constant and treated (7-12) as an ordinary differential equation in x. The solution is therefore

$$u(x,t) = A\exp(-ap^{\frac{1}{2}}x) + B\exp(ap^{\frac{1}{2}}x) \tag{7-13}$$

where A and B are independent of x. On physical grounds he was led to choose B as zero. If we do so, the boundary condition of (7-11b) implies that $A = u_0$. Thus

$$u(x,t) = \exp(-ap^{\frac{1}{2}}x)u_0.$$

Expanding the exponential in a power series, we obtain

$$u(x,t) = u_0 + \sum_{n=1}^{\infty} \frac{(-ax)^n}{n!} p^{\frac{n}{2}} u_0.$$

Now Heaviside ignored positive integral powers of p and wrote u as

$$\begin{aligned} u(x,t) &= u_0 + \sum_{n\ odd}^{\infty} \frac{(-ax)^n}{n!} p^{\frac{n}{2}} u_0 \\ &= u_0 - \sum_{m=0}^{\infty} \frac{(ax)^{2m+1}}{(2m+1)!} p^m [p^{\frac{1}{2}} u_0] \end{aligned} \tag{7-14}$$

Since

$$p^{\frac{1}{2}} u_0 = \frac{u_0}{\sqrt{\pi t}} \tag{7-15}$$

Although formula (7-15) is certainly the correct expression for the fractional derivative of a constant of order $\frac{1}{2}$, Heaviside did not record how he arrived at (7-15). One may speculate on how he deduced this result; however, we choose not to second-guess a genius.

Substituting (7-15) into (7-14) immediately yields

$$u(x,t) = u_0 - \frac{u_0}{\sqrt{\pi}} \sum_{m=0}^{\infty} \frac{(ax)^{2m+1}}{(2m+1)!} D^m t^{-\frac{1}{2}}.$$

Or

$$\begin{aligned} &u(x,t) \\ &= u_0 - \frac{u_0}{\sqrt{\pi}} \sum_{m=0}^{\infty} \frac{(-1)^m}{m!} \frac{(ax)^{2m+1}}{(2m+1)2^{2m} t^{m+(1/2)}} \end{aligned} \tag{7-16}$$

If we note that

$$\frac{(ax)^{2m+1}}{(2m+1)2^{2m} t^{m+(1/2)}} = 2\int_0^{\frac{ax}{2\sqrt{t}}} \xi^{2m} d\xi$$

then (7-16) reduces to

$$\begin{aligned} &u(x,t) \\ &= u_0 - \frac{2u_0}{\sqrt{\pi}} \int_0^{\frac{ax}{2\sqrt{t}}} e^{-\xi^2} d\xi = u_0 - u_0\ erf\left(\frac{ax}{2\sqrt{t}}\right) \end{aligned} \tag{7-17}$$

which is the solution to our problem. ($erf(x)$ is Error function)

7.3. Fluid Flow and the Design of a Weir Notch

A weir notch is an opening in a dam (weir) that allows water to spill over the dam, see Figure 7-2, where we have

indicated a cross section of the dam and a partial front view. (The sketch is not to scale.) [5,25,33].

Our problem is to design the shape of the opening such that the rate of flow of water through the notch (say, in cubic feet per second) is a specified function of the height of the opening. Starting from physical principles we derive the equation for determining the shape of the notch. It turns out to be an integral equation of the Riemann-Liouville type. After formulating the problem, we shall, of course, solve it.

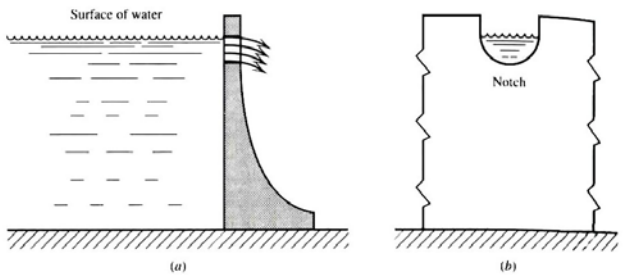

Figure 7-2

Let the x-axis denote the direction of flow, the z-axis the vertical direction, and the y-axis the transverse direction along the face of the dam. See Figure 7-3, where we have drawn an enlarged view of a portion of Figure 7-2. The axes are oriented as indicated, and h is the height of the notch.

The solid square at point I and the solid square at point II are supposed to indicate the same element of fluid as it moves from point I [with coordinates (x_0, y_0, z_0)] to point II [with coordinates $(0, y_0, z_0)$] along the same "tube of flow." Then by Bernoulli's theorem from hydrodynamics

$$\frac{P_I}{\rho} + gz_0 + \frac{1}{2}V_I^2 = \frac{P_{II}}{\rho} + gz_0 + \frac{1}{2}V_{II}^2 \qquad (7\text{-}18)$$

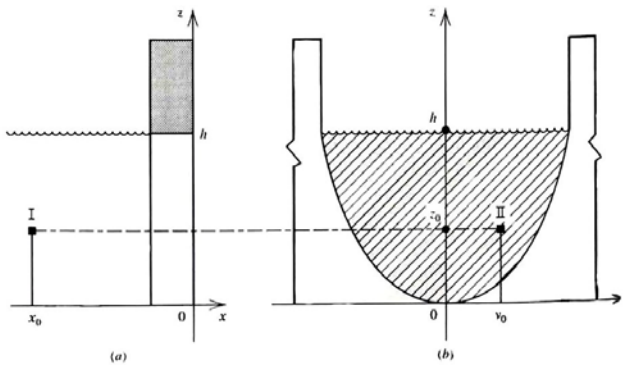

Figure 7-3

where ρ is the density of water, g the acceleration of gravity, and P_I and V_I are the pressure and velocity at point I while P_{II} and V_{II} are the corresponding quantities at point II.

If we assume that point I is far enough upstream, V_I is negligible and we may write (7-18) as

$$P_I - P_{II} = \frac{1}{2}\rho V_{II}^2 \qquad (7\text{-}19)$$

Now

$$P_I = \left(atmosheric\ pressure\right) + \begin{pmatrix} the\ pressure\ exerted\ by \\ a\ column\ of\ water\ of\ height\ h - z_0 \end{pmatrix}$$

and since point II is in the plane of the notch (the shaded area of Figure 7-3b)

$$P_{II} = atmosheric\ pressure.$$

Thus $P_I - P_{II}$ is a constant (namely, ρg) times $(h - z_0)$ and (7-19) implies that

$$V_{II} = \sqrt{2g}(h - z_0)^{\frac{1}{2}} \qquad (7\text{-}20)$$

Referring to Figure 7-4, we see that the element of area dA (the shaded region in Figure 7-4) is

$$dA = 2\,|\,y\,|\,dz \qquad (7\text{-}21)$$

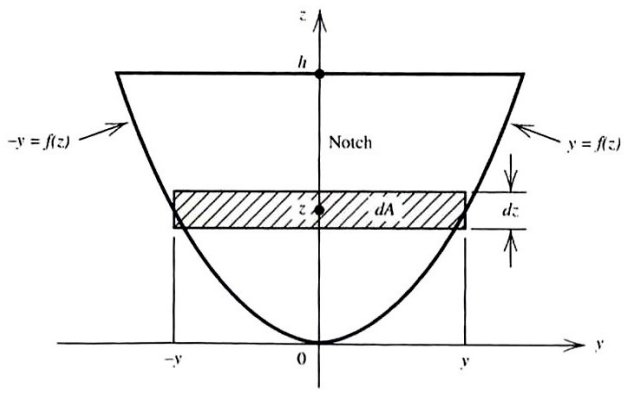

Figure 7-4

where we have assumed that the shape of the notch is symmetrical about the z-axis. Now $|\,y\,|$ is some function of z, say

$$|\,y\,| = f(z), \qquad (7\text{-}22)$$

and we may write (7-21) as $dA = 2f(z)dz$. Thus the incremental rate of flow of water through the area dA is $dQ = VdA$, where V is the velocity of flow at height z, and from (7-20)

$$dQ = 2\sqrt{2g}(h - z)^{\frac{1}{2}} f(z)dz.$$

The total flow of water through the notch is thus

$$Q = \int_0^h dQ(z) = 2\sqrt{2g}\int_0^h (h - z)^{\frac{1}{2}} f(z)dz \qquad (7\text{-}23)$$

Equation (7-23) is the desired integral equation for the determination of f when Q is given. In the notation of the fractional calculus we may write it as

$$Q(h) = \sqrt{2g\pi}D^{-\frac{3}{2}} f(h) \qquad (7\text{-}24)$$

To solve (7-24) we first observe that if $f \in \mathbf{C}$, then certainly Q also is of class $\mathbf{C}$. Hence

$$D^{\frac{3}{2}}Q(h)=\sqrt{2g\pi}D^{\frac{3}{2}}[D^{-\frac{3}{2}}f(h)],$$

and by Theorem 1

$$f(h)=\frac{1}{\sqrt{2g\pi}}D^{\frac{3}{2}}Q(h) \qquad (7\text{-}25)$$

which is the desired solution.

For example, suppose that $Q(z)=kz^{\lambda}$, (where k; is a constant). Then certainly $Q\in\mathbf{C}$ if $\lambda>-1$ and

$$D^{\frac{3}{2}}Q(z)=\frac{k\Gamma(\lambda+1)}{\Gamma(\lambda-1/2)}z^{\lambda-\frac{3}{2}},$$

Thus, by equation (7-25), we have

$$f(z)=\frac{k\Gamma(\lambda+1)}{\sqrt{2g\pi}\Gamma(\lambda-1/2)}z^{\lambda-\frac{3}{2}},$$

Where $f\in\mathbf{C}$ and $\lambda-\frac{3}{2}>-1$ or $\lambda>\frac{1}{2}$.

In particular, if $\lambda=\frac{5}{2}$, that is, $Q(z)=kz^{\frac{5}{2}}$ then

$$f(z)=\frac{k\Gamma(7/2)}{\sqrt{2g\pi}\Gamma(2)}z=\frac{15k}{8\sqrt{2g}}z.$$

and the notch is V-shaped (Figure 7-5).

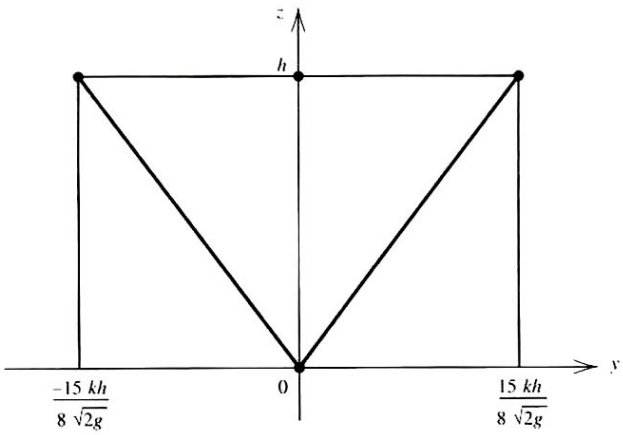

Figure 7-5

References

[1] Parsian H., *Special Functions and its Applications*, Bu-Ali Sina University, Iran, 1379.

[2] Abel N.H.; *Solution de quelques a l'aide d'integrales defines; Ocuvers Completes*; Vol. 1; Grondahl, Christiania; Norway; 1881.

[3] Arvet P., Enn T., *Numerical solution of nonlinear fractional differential equations by spline collocation methods*, Journal of Computational and Applied Mathematics, 255, p.216-230, 2014.

[4] Leung, A.Y.T., Zhongjin G., Yang, H.X., *Fractional derivative and time delay damper characteristics in Duffing–van der Pol oscillators*, Communications in Nonlinear Science and Numerical Simulation, 18(10),p.2900-2915, 2013.

[5] Brenke W.C.; *An Application of Able's Integral equation*; Amer. Math. Monthly; Vol. 29; PP. 58-60; 1992.

[6] Camko S.; *The Multimensional Fractional Integrodifferentiation and The Grunwald-Letnikov approach to Fractional Calculus;proceedings of the International Conference on ractional Calculus and Its Applications*; College of Engineering; Nihon university; Tokyo; pp. 221-225; May-june 1989.

[7] Camko S., Marichev O., and Kilbos A.; *Fractional Integrals and Drivatives and Some of their Applications; Science and Technica*; Minsk; 1987 (in Russian).

[8] Churchill R.V.; *Modern Operational Mathematics in Engineering*; Mc-Graw-Hill; New York; 1994.

[9] Courant R. and John F.; *Introduction to Calculus and Analysis*; John Wiley; New York; Vol. 1; 1965.

[10] Falconer K.; *Fractal Geometry - Mathematical Foundations and Applications*; John Wiley; New York; Second Edition, 2003.

[11] Gemant A.; *A method of analyzing experimental result obtained from elastoviscous bodies*; Physics 7; PP. 311-317; 1936.

[12] Heaviside O.; *Electrical Papers*; Macmillan; London; 1892.

[13] Hilfer R.; *Applications of Fractional calculus in Physics*; World Scientific; Singapore; 2000.

[14] Kiryakova V.; *A long standing conjecture failed? In: P. Rusev, I. Dimovski, V. Kiryakova; Transform Method and Special Functions*; Varna'96 (Proc. 3rd International Workshop); Institute of Mathematics and Informatics; Bulgarian Academy of Sciences; Sofia; PP. 579-588;1998.

[15] Kolwankar K.M.; *Studies of Fractal Structures and Processes Using Methods of Fractional Calculus*; http://arxiv.org/abs/chao-dyn/9811008.

[16] Kolwankar K.M., and Gangal A.D.; *In the proceeding of the Conference "Fractals in Enginering"*; Archanon; 1997.

[17] Kolwankar K.M., and Gangal A.D.; *Local Fractional Derivatives and Fractal functions of several variables*; http://arxiv.org/pdf/physics/9801010.

[18] Lacroix S.F.; *Traite du calcul differential et du calcul integral. 2nd ed.*; Courcier; Paris; pp. 409-410; 1819.

[19] Laurent H.; *Sur le calcul des derives a indices quelconques*; Nouv. Ann. Math.; Vol. 3; PP. 240-252; 1884.

[20] Lavoie J.L., Osler T.J., and Tremblay R.; *Fractional Derivatives and Special functions*; SIAM Rev.; Vol. 18; PP. 240-268; 1976.

[21] Leibniz G.W.; *Letter from Hanover; Germany; to G.F.A. L'Hopital*, September 30; 1695; in Mathematische Schriften, 1849; reprinted 1962, Olms verlag; Hidesheim; Germany; Vol. 2, PP. 301-302; 1965.

[22] Mainardi F.; *Considerations on fractional calculus: Interpretations and Applications, In: P. Rusev, I. Dimovski, V. Kiryakova; Transform Method and Special Functions*; Varna'96 (Proc. 3rd International Workshop); Institute of Mathematics and Informatics; Bulgarian Academy of Sci.; Sofia; PP. 579-588;1998.

[23] Mc Bride A. and Roach G.; *Fractional Calculus Research Notes in mathematics*; Vol. 138; Pitman; Boston-London-Melbourne; 1985.

[24] Miller K.S.; *Linear Differential Equation in Engineering Problem*; Prentice Hall; New York; 1953.

[25] Miller K.S. and Ross B.; *an Introduction to the Fractional Calculus and Fractional Differential Equations*; John Wiley & Sons, Inc.; New York; 1993.

[26] Nishimoto K.; *Fractional Calculus and Its Applications*; Nihon university; Koriyama; 1990.

[27] Oldham K.B., and Spanier J.; *The Fractional calculus*; Academic Press; New York; 1974.

[28] Osler T.J.; *SIAM Journal*; Math. Anal.; Vol.2; P. 37; 1971.

[29] Poldlubny I.; *Geometric and Physical Inteerpretation of Fractional Integration and Fractional Differentiation*; Fractional Calculus and Applied Analysis Journal; Vol. 5; PP. 367-386; 2002

[30] Welland G.V.; *Proc. Amer. Math. Soc.*; Vol. 19; P. 135; 1968.

[31] Ross B.; editor, *proceeding of the International Conference on Fractionl Calculus and Its Applications*; University of New Haven; West Haven; Conn., June 1974; Springer-verlag; New York; 1975.

[32] Ross B.; *In Fractional Calculus and Its Applications: Lecture Notes in Mathematics*; Springer-Verlag; New York; Vol. 457; P. 1; 1975.

[33] Ross B.; *Brief Note: The Reimann-liouville Transformation*; J. Math. Modeling; Vol. 2; PP. 233-236; 1981.